pp. 89–166] [February, 1938

TROPICAL DISEASES BULLETIN

VOL. 35.] 1938. [No. 2.

IMPERIAL MYCOLOGICAL INSTITUTE
24 FEB. 1938

Main Contents:

TROPICAL DERMATOLOGY.
MALARIA.
YELLOW FEVER
RELAPSING FEVER AND OTHER SPIROCHAETOSES.
RAT-BITE FEVER.
LEPTOSPIROSIS.
MISCELLANEOUS.
MEDICAL AND SANITARY REPORTS.

For detailed Contents see pp. ii, iv, vi & viii.

Issued under
the Direction of the
Honorary Managing Committee of the
BUREAU OF HYGIENE AND TROPICAL DISEASES,
Keppel Street, London, W.C.1.

Price 2/6 Net.] *Entered as Second Class Matter in the U.S.A. Post.* [Annual Subscription 21/-, With Supplement 25/-.

HONORARY MANAGING COMMITTEE

APPOINTED BY THE SECRETARY OF STATE FOR THE COLONIES.

Wm. Horner Andrews, D.Sc., M.R.C.V.S.
Thomas Carnwath, *D.S.O.*, D.Sc., M.B.
(*representing the Ministry of Health*).
Sir Arthur Horn, C.M.G., M.D., M.R.C.P.
Professor W. W. Jameson, M.D., F.R.C.P.
Professor Sir John Ledingham, C.M.G., LL.D., D.Sc., M.B., F.R.C.P., F.R.S.
(*representing the Royal Society*).
G. Carmichael Low, M.D., F.R.C.P.,
P. H. Manson-Bahr, C.M.G., *D.S.O.*, M.D., F.R.C.P., D.T.M. & H.
Major-General Sir John Megaw, K.C.I.E., K.H.P., M.B., Ch.B., I.M.S. (retd.).
Sir Edward Mellanby, K.C.B., M.D., F.R.C.P., F.R.S.
(*representing the Medical Research Council*).
I. T. M. Pink
(*representing the Foreign Office*).
J. A. Calder
(*of the Colonial Office*).
Secretary: J. B. Sidebotham, *of the Colonial Office.*

STAFF OF THE BUREAU:

Director:
H. Harold Scott, C.M.G., M.D., F.R.C.P., D.P.H., D.T.M. & H.

Secretary:
R. L. Sheppard.

SECTIONAL EDITORS, TROPICAL DISEASES BULLETIN.

Professor P. A. Buxton, M.A., M.R.C.S., L.R.C.P., D.T.M. & H.
Lt.-Col. E. D. W. Greig, C.I.E., D.Sc., M.D., F.R.C.P.E., I.M.S. (retd.).
Major-General D. Harvey, C.B., C.M.G., C.B.E., M.D., R.A.M.C. (retd.).
Lt.-Col. W. F. Harvey, C.I.E., M.B., F.R.C.P.E., D.P.H., I.M.S. (retd.).
Professor Edward Hindle, M.A., Sc.D., Ph.D.
Lt.-Col. H. Kirkpatrick, M.B., B.Ch., I.M.S. (retd.).
Lt.-Col. Clayton Lane, M.D., I.M.S. (retd.).
Maj.-Gen. W. P. MacArthur, C.B., *D.S.O.*, O.B.E., D.Sc., M.D., D.P.H., F.R.C.P., F.R.C.P.I., A.M.S.
Lt.-Col. A. G. McKendrick, D.Sc., M.B., Ch.B., F.R.C.P.E., I.M.S. (retd.).
Maj.-Gen. Sir Leonard Rogers, K.C.S.I., C.I.E., M.D., F.R.S., I.M.S. (retd.).
Hugh Stannus Stannus, Ph.D., M.D., F.R.C.P., D.T.M. & H.
M. Sydney Thomson, M.A., M.D., F.R.C.P.
C. M. Wenyon, C.M.G., C.B.E., M.B., B.S., B.Sc., F.R.S.
F. Norman White, C.I.E., M.D., D.P.H., I.M.S. (retd.).
Professor Warrington Yorke, M.D., F.R.C.P., F.R.S.

BUREAU OF HYGIENE AND TROPICAL DISEASES.

TROPICAL DISEASES BULLETIN.

Vol. 35.] 1938. [No. 2.

TROPICAL DERMATOLOGY.

A REVIEW OF RECENT ARTICLES. IV.*

Chromoblastomycosis.—From Japan there comes a long account of a single case, published by TAKAHASHI[1]. A seventy-seven year old farmer living near Tokio, struck the back of his right wrist against a piece of wood. The slight abrasion healed within ten days but after another ten days a small red nodule appeared on the site. This gradually enlarged and broke down some four weeks later. The patient was seen about twelve months after the original accident and he then presented an ulcer measuring 8 cm. by 4½ cm. over the back of the hand and forearm but with the long axis lying transversely. The surrounding skin was bright red whilst the edge of the ulcer was blue, raised, in some places undermined and in others infiltrated. The base was studded with small papillomata, yellowish red in colour and none of them larger than the size of a pin's head. A greyish white exudate could be expressed from between these excrescences. Some hyperkeratosis was present over the radial edge of the ulcer, which on the whole had the consistency of a tuberculous lesion. No enlargement of the glands could be detected, nor were there any signs of systemic involvement. From this patch there was isolated a fungus, of which full histological and cultural details are given. To this it is proposed to give the name *Hormodendron japonicum* n. sp. The organism was experimentally injected into the patient and into a volunteer; in both cases specific lesions resulted. The fungus was also proved to be strongly pathogenic to mice and white rats, but guineapigs and dogs were not susceptible to infection.

Acladiosis.—BUTLER[2] has made a very careful study of all available records and descriptions of *Acladium castellanii*. He also gives a very full account of its morphology when studied in different organic media. The resulting conclusion is that this fungus is really very "closely

* For the third of this Series see Vol. 34, pp. 175–182.

[1] TAKAHASHI (Yoshisada). Zur Chromoblastomykose. (II. Mitteilung.) Ueber Chromoblastomykose, hervorgerufen durch *Hormodendron japonicum* n. sp.—*Japanese Jl. Dermat. & Urol.* 1937. Feb. 20. Vol. 41. No. 2. pp. 53–62. With 7 figs.

[2] BUTLER (E. J.). *Acladium castellanii* Pinoy and the Existence of the So-called Acladiosis of Castellani.—*Parasitology.* 1937. Apr. Vol. 29. No. 2. pp. 259–265. With 9 figs. & 1 coloured plate. [13 refs.]

related to, and perhaps merely a strain of, the widely distributed *Sporotrichum schenki*, the commonest cause of human and equine sporotrichosis, and that the term acladiosis as denominating a distinct disease should be deleted."

Nocardia.—An English summary accompanies a paper in Italian by CARPANO[3]. This contains very few clinical details, being mainly of pathological interest. In Egypt there exist certain chronic nodular and pustular lesions of the face which are resistant to treatment, which give rise to frequent relapses and which leave scars similar to those seen after smallpox. The organism found in the pus is anaerobic and extremely difficult to cultivate. It is also polymorphic and animal experiments have proved unsatisfactory in that no particular type of lesion appears to be caused by inoculation. Nevertheless the fungus is considered to belong to the *Cohnistreptothrix* and the author proposes a new species, *C. misri*.

Piedra.—A simplification of the classification of these fungi is proposed by SIMONS[4], who considers that the terms "black" and "white" piedra are sufficient. The black form is essentially tropical in distribution, whilst the white form is also found in Europe. Both varieties have been cultivated from the same hairs, but it was found that only the black form could be grown after the hairs had been washed in 70 per cent. alcohol and then kept for some months. It is further suggested that the white is only a secondary invader and is therefore a *Piedraia*. All the author's histological preparations of the black organism were characteristic of the Hortai fungus. In the case of one white specimen, however, he found that hanging drop cultures showed blastospores, chlamydospores or mycelium, thus differing from other white varieties which have been described. It is suggested that this particular white form really belongs to the *Geotrichoides*. A clinical account of the condition as seen in chimpanzees is published by LOCHTE[5], who found five cases in the Munich zoo. Attention was first drawn to one particular animal in which the white hairs on the genital area were seen to bear brownish black colonies of the fungus. The microscopical picture was typical. Subsequently, five out of seven chimpanzees examined were found to be infected. They had all been obtained from the Cameroons and in all of them the disease differed from that seen in human beings in that the affected hairs became fragmented. Specimens of hair obtained from chimpanzees in the zoos at Copenhagen, Hamburg and Göttingen were found to be free from infection.

Trichosporosis.—NIVEN[6] describes a case seen in a male European aged 35 years, in whom black nodules were found on hairs situated on the top and on the right side of the head. This is apparently the

---

[3] CARPANO (Matteo). Su di una *Nocardiacea* osservata in una dermatosi nodulo-pustulosa dell'uomo in Egitto (*Cohnistreptothrix misri* n. sp.).—*Riv. di Parassit.* Rome. 1937. Apr. Vol. 1. No. 2. pp. 107–131. With 20 figs. on 5 plates. [10 refs.] English summary.

[4] SIMONS (R. D. G. Ph.). Piedra alba en piedra nigra.—*Geneesk. Tijdschr. v. Nederl.-Indië.* 1936. Nov. 17. Vol. 76. No. 46. pp. 2976–2986. With 10 figs. on 2 plates. [29 refs.] English summary.

[5] LOCHTE (Th.). Ueber das Vorkommen der Piedra beim Schimpansen und ueber die Beziehungen der tierischen Piedra zur menschlichen.—*Arch. f. Dermat. u. Syph.* 1937. Jan. 2. Vol. 175. No. 1. pp. 107–113. With 7 figs.

[6] NIVEN (J. C.). A Case of Trichosporosis in Malaya.—*Malayan Med. Jl.* 1936. Dec. Vol. 11. No. 4. p. 223.

first case to be described in Malaya. The fungus was found to resemble *T. giganteum* very closely, but its spores were somewhat smaller, being only 4·7μ to 9·3μ in diameter.

Pinta.—It has been claimed that in Yucatan there exists a special type of pinta which is characterized solely by complete depigmentation. Howard Fox[7] has investigated this statement and in his opinion it is entirely without foundation. The disease so described appears to be ordinary vitiligo and it is even unconnected with syphilis, for only 1 out of 25 cases gave a positive Wassermann reaction in the blood. In pinta of course, the number of positive Wassermann reactions is as high as it is in secondary syphilis or secondary yaws, *i.e.*, it occurs in practically all cases. Nor had any of the suspected patients ever exhibited any of the various shades of blue so characteristic of pinta. No story suggestive of earlier pigmentation of any kind was ever obtained. The author makes no mention of fungi as he does not believe that they play any part whatever in the causation of this disease.

Tinea tonsurans.—The amount of work that has been done on this disease in North Africa during the past decade is astonishing. CATANEI[8] now reviews the whole period so far as the town of Algiers is concerned. Of 184 infected children, only 18 were of European stock. These showed the presence of *T. glabrum*, *T. violaceum*, *T. acuminatum* and *T. umbilicatum* in that order of frequency. The remaining 166 natives showed the great preponderance of *T. glabrum*, 125 being infected therewith. *T. violaceum* provided a poor second, 25 cases being found. Only one example of infection with *T. fumatum* had been seen. There were only 11 cases of *Microsporon* invasion of the scalp, of whom 4 were Europeans, 2 were Jews and the rest were natives. All eleven showed *M. felineum* on culture. Favus of the scalp was seen 79 times, but only 3 cases occurred in Europeans. Cultures of *A. schönleinii* were grown from 66 of the children. So far as the glabrous skin was concerned it is interesting to note that *T. radiolatum* was only isolated on two occasions. In brief, the flora in the town was similar to that found in the surrounding country. As always, more varieties were found among Europeans than among natives. The same author, in collaboration with FOLEY and PARROT[9] describes the first case seen in an adult native of cutaneous ringworm due to *T. violaceum*. It occurred on the left wrist of a man aged thirty, living in the Southern Oran. The scalp infections in the children of this area are nearly all due to this organism. LANGERON[10] has published a further paper concerning the material obtained from 3,000 infected children in French Western Morocco (see *C. R. Acad. Sci.*, 1937, Vol. 204, p. 372). The distribution of ringworm is patchy, but of course it does occur particularly in towns. *T. violaceum* is dominant and *T. glabrum* is rare. Some 20 per cent. are due to *T. endothrix*. Altitude

[7] FOX (Howard). White Pinta, or Vitiligo, in Yucatan.—*Arch. Dermat. & Syph.* 1937. Sept. Vol. 36. No. 3. pp. 534–535.

[8] CATANEI (A.). Les teignes à Alger.—*Bull. Soc. Path. Exot.* 1936. Dec. 9. Vol. 29. No. 10. pp. 1038–1042.

[9] FOLEY (H.), PARROT (L.) & CATANEI (A.). Sur un cas de teigne cutanée à *Trichophyton violaceum* chez un indigène adulte en Algérie.—*Arch. Inst. Pasteur d'Algérie.* 1936. Dec. Vol. 14. No. 4. pp. 424–425.

[10] LANGERON (Maurice). Nouvelles observations statistiques et mycologiques sur les teignes humaines au Maroc.—*C. R. Acad. Sci.* 1937. Aug. 23. Vol. 205. No. 8. pp. 422–424.

does not apparently affect the incidence, and Jews do not seem to be more prone to the disease than are other races. Favus due to *A. schönleinii* is rare. The type *milochevitchi* is dominant on the coast and in Marrakesh, whilst the types *debueni* and *brumpti* are most common among the nomadic peoples of the Atlas areas. The type *pittalugai* has been seen in Fez, in which town there has also been found the type *talicei*, both, however, being extremely rare. It is interesting to note that types *debueni* and *brumpti* have not been found below the 1,500 feet level, whilst the type *milochevitchi* occurs only below that elevation and has never been seen above it.

Other Fungus Infections.—SARTORY[11] makes reference to a tropical dermatosis caused by a yeast-like organism. This paper is restricted to notes on the investigations into the identification of the parasite, all clinical details being reserved for a later communication. It is proposed to christen the fungus *Geotrichoides lambarenensis* n. sp. Very full details are given and among them the following points are of importance. There is a ramifying mycelium having a diameter less than 1μ, which is extremely fragile and sometimes spiral. Reproduction occurs by means of apical or lateral blastospores and chromophil arthrospores. On solid media there are formed white viscous colonies which later become more membranous and turn a mahogany brown colour. The organism produces liquefaction in gelatin, casein and serum-albumen, whilst hydrolysis of the mono- and di-saccharides occurs without production of gas except in the cases of lactose and saccharose. Maize mildew has hitherto not been thought to be pathogenic to man, but PREININGER[12] has now published a case in which this fungus, a basidio-mycete *Ustilago maydis*, has definitely invaded human skin. The patient was a male agricultural labourer, aged 31, living in Central Europe. The lesions started with burning, redness, swelling and dryness of the feet and hands. Within three days the same changes made their appearance in the flexures of the knees, elbows and axillae. At the time of examination, some three weeks after onset, practically the whole of the head, body and limbs was affected. The skin generally was seen to be red, with a brownish tinge, and flaking. On the chest and buttocks there were scattered red, hard, pin's-head sized papules. The fungus was easily found on microscopy of scales, all other pathological investigations proving negative. The diagnosis was confirmed by the history and by finding the same organism in specimens of maize obtained from the field in which the man had been working. The author then recalls to mind an exactly similar case seen some two years earlier. Contributory factors are probably to be found in excessive sweating under heavy clothing during a warm, wet autumn.

Cultures of Fungi.—A rapid cultural method for the diagnosis of tinea infections is described by BLUMENTHAL and SNOW[13]. Careful

---

[11] SARTORY (A.), SARTORY (R.), MEYER (J.) & WALTER. Une dermatomycose tropicale causée par un champignon levuriforme: *Geotrichoides lambarenensis.—Ann. Inst. Pasteur.* 1936. Nov. Vol. 57. No. 5. pp. 526–544. With 8 figs.

[12] PREININGER (Thomas). Durch Maisbrand (Ustilago maydis) bedingte Dermatomykose.—*Arch. f. Dermat. u. Syph.* 1937. Oct. 19. Vol. 176. No. 2. pp. 109–113. With 3 figs.

[13] BLUMENTHAL (Franz L.) & SNOW (James S.). A Rapid Cultural Method for the Diagnosis of Tinea Infections.—*Jl. Amer. Med. Assoc.* 1936. Oct. 24. Vol. 107. No. 17. pp. 1367–1369. With 4 figs.

attempts have been made to ensure the validity of the experiments by using 48 different cases of ringworm, 42 controls, direct microscopy and the usual methods of culture. A hanging drop preparation is made in a liquid medium consisting of crude maltose of Chamet 4 gm., peptone of Chassaing 1 gm., with distilled water made up to 100 cm. A small amount of carefully selected material is placed in the centre of the slide, the coverslip then being sealed with melted paraffin applied to the edges with a knife. Incubation is carried out at room temperature and the preparation is examined twice daily. Positive growth has been found to occur within one to eight days in 72 per cent. of the cases. The illustrations are very striking.

Pityriasis Rosea.—MAPLESTONE and DEY[14] briefly consider the hypotheses which have been advanced as to the causation of this disease. In an effort to elucidate the problem they treated cases by injection with a filtered, carbolized emulsion of material taken from the skin lesions which presumably contain the killed virus. Their results are not absolutely conclusive, but they do lend very strong support to the work of Thomson and Cumings, who were the first to produce reasonable evidence that a virus is the causative factor. It is also important to note that the authors looked for fungi without avail and that in India ! A " new " lesion of about 1 cm. diameter was cleaned with a mixture of equal parts of alcohol and ether. It was then anaesthetized by the injection of 2 per cent. novocaine beneath it and dissected out, care being taken to include no normal skin in the specimen. This excised material was then thoroughly washed with water and ground up in an agate mortar with sterile pumice powder. Normal saline was gradually added to mix 1 cc. with each 10 mgm. of tissue. When homogeneous this was filtered through a Chamberland L3 candle into a vaccine bottle and to the filtrate was added an equal quantity of either 1 per cent. phenol or 0·2 per cent. formalin. The preparation was ready for use after testing for sterility. This solution was injected in 28 cases, starting with 0·1 cc. and increasing by 0·1 cc. daily, 0·5 cc. being the maximum adult dose. The method did apparently shorten the course of the disease and it is certain that some more chronic cases did clear rapidly after the commencement of treatment. Careful study of the cases in detail certainly makes their results more striking.

Diseases of the Skin in Negroes.—A general study is presented by LOEWENTHAL[15], who first describes the anatomy of the skin. There are more apocrine sweat-glands, more sebaceous glands and a greater number of skin capillaries than occur in the white races. The distribution of pigment in the epidermis, mucous membranes, body areas, etc., is fully described and it is suggested that the lighter skinned races have chosen their environment. This is, of course, in opposition to the more general view that the environment has changed the racial characteristics. Racial factors play their part in the aetiology of dermatoses, thus fibrosis, keloid formation and lichenoid papules are all more common in the black races. Other skin lesions seem to be

---

[14] MAPLESTONE (P. A.) & DEY (N. C.). The Treatment of Pityriasis Rosea.—*Indian Med. Gaz.* 1937. Mar. Vol. 72. No. 3. pp. 135–139.

[15] LOEWENTHAL (L. J. A.). Diseases of the Skin in Negroes.—*Jl. Trop. Med. & Hyg.* 1936. Sept. 15, Nov. 2, 16, Dec. 1 & 15. Vol. 29. Nos. 18, 21, 22, 23 & 24. pp. 209–212 ; 250–251 ; 260–264 ; 276–278 ; 295–297 & 1937. Jan. 1. Vol. 40. No. 1. pp. 4–8. With 5 figs. [132 refs.]

specially modified, thus the annular papular syphilide is almost a racial peculiarity, whilst gummata in the centre of the forehead are a common result of trauma in Moslems. Some diseases are relatively rare, *e.g.*, psoriasis, rosacea, eczema, dermatitis due to external irritants, alopecia senilis and alopecia areata is said to be actually unknown. Many other problems are mentioned, such as the relative lack of itching, the probable relative immunity from cutaneous forms of cancer, etc. A paper which is both interesting and stimulating.

Sydney Thomson.

MALARIA.

MARTINI (E.). Die didaktische Bedeutung der Malaria. [**Didactic Importance of Malaria.**]—*Arch. f. Schiffs- u. Trop.-Hyg.* 1937. Jan. Vol. 41. No. 1. pp. 158–162.

The author notes that in the Hygiene Museum in Dresden the space devoted to malaria is a single small showcase. Though this may be justified by the fact that the disease is of little practical importance in Germany, nevertheless it should be realized that, from the instructional point of view, there is no disease so suitable for teaching the student the principles of epidemiology and disease prevention. The subject of malaria has many aspects and embraces knowledge of the vertebrate and invertebrate hosts, the parasites causing the disease, the methods of infection and the various factors influencing the transmission of the disease. All these have been so throughly worked out that there can be no better educational exercise for the student than the study of malaria from every point of view. *C. M. Wenyon.*

SWEET (W. C.). **A Study of Village Malaria in Mysore State.**—*Records of the Malaria Survey of India.* 1937. June–Sept. Vol. 7. Nos. 2 & 3. pp. 191–207. With 1 map & 2 graphs.

This is a study of malaria in three villages close to the junction of the Cauvery and Kabbani Rivers in Mysore. In spite of their propinquity the malaria conditions in these three villages are very different. Gargeshwari had a spleen index of 21 (children from 0 to 14 years of age) and a corresponding parasite index of 6·9. During the previous year, 1934, there had been a mild epidemic, but it is probable that this village is never entirely free from malaria. Yedadore has a high degree of endemic malaria: parasite index 41·7, spleen index 73·7. Byrapura is generally nearly free from malaria; in 1935, however, when the study was made, there was a mild epidemic. Infection probably originated from a camp of bridge labourers close at hand. The parasite index was 16·4 and the spleen index 15·0. *A. culicifacies* is much the most prevalent Anopheline. Its prevalence was approximately equal in Gargeshwari and Yedadore but considerably lower in Byrapura. Catches in human dwellings, in buildings housing both human beings and cattle and in cattle sheds, of infected and non-infected *A. culicifacies*, suggest that this species is not strongly attracted to human beings as a source of blood. Houses harbouring both man and cattle appear to offer special facilities for malaria transmission. The relative scarcity of such buildings in Gargeshwari possibly explains why that village suffers much less from malaria than does Yedadore. The comparatively low density of *A. culicifacies* in Byrapura probably explains its normally low malaria incidence.

Norman White.

EGYPT, MINISTRY OF PUBLIC HEALTH. ANNUAL REPORT ON THE WORK OF THE DEPARTMENT OF PUBLIC HEALTH FOR 1935. [**Malaria** pp. 47–56.]

The number of cases of malaria notified to the Ministry of Public Health of Egypt has increased each year since the disease was made notifiable in 1930. How far this represents a real increase in the

incidence of the disease it is impossible to say. During the last two years, however, the Nile floods have been abnormal and it is probable that this has produced increased malaria prevalence. In 1935 there were 7,560 cases reported with 62 deaths, as compared with 3,057 cases and 31 deaths in the previous year. The report gives informtaion regarding the distribution of these cases and details of the anti-larval and other measures taken in an attempt to control the disease.

N. W.

PERYASSÚ (Antonio). O impaludismo no Para. [**Malaria in Pará, Brazil.**]—*Brasil-Medico.* 1937. Sept. 25. Vol. 51. No. 39. pp. 995–997.

This paper contains information about the prevalence of malaria in the State of Pará and the measures designed to diminish the prevalence. The disease is widespread throughout the territory. *Pl. vivax* infections are four times as numerous as are *falciparum.* Quartan infections are commonly met with in rural areas, rarely in towns. The two Anophelines that are responsible for nearly all the malaria in Pará, as in most other parts of Brazil, are *albitarsis* and *tarsimaculatus.* The density of these two species in certain parts of the interior is described as fantastic. For the purpose of malaria control the State is divided into ten districts, each in the charge of a special medical officer with subordinate staff. Each municipality has its own medical officer or pharmacist with hospital accommodation of from 10 to 15 beds, for the treatment of grave cases, and a laboratory. Travelling dispensaries provide for the distribution of anti-malaria drugs in outlying districts. Special measures are enforced for the destruction of mosquitoes and larvae on steamboats on the Amazon.

N. W.

SCHARFF (J. W.). **Hydro-Technical Methods in the Prevention of Malaria.**—*Jl. Roy. San. Inst.* 1937. Nov. Vol. 58. No. 5. pp. 345–350. With 4 figs.

This paper was read before the Tropical Hygiene Section of the Health Congress of the Royal Sanitary Institute. The different methods of hydro-technical control are enumerated and a short description is given of two such methods that have demonstrated their utility in Malaya, *viz.*, sluicing or flushing, and agitation of the water surface. The author has previously published full descriptions of this work, which have been noted in this *Bulletin* [1936, Vol. 33, p. 770]. *N. W.*

HARKNESS (J. W. P.) & SAMAHA (M. Y.). **The Use of Dynamite in Anti-Malarial Drainage and Reclamation of Marshes.**—*Jl. Roy. San. Inst.* 1937. Nov. Vol. 58. No. 5. pp. 337–345. With 5 figs.

This is a very interesting description of the reclamation of marshland some two thousand acres in extent about 17 miles north of Jaffa. The necessary drainage canals were excavated by dynamite. Reeds and vegetation were cut to ground-level along the line of the proposed canal. A plank 12 feet long, 1 foot wide and 2 inches thick had a row of holes 2 inches in diameter bored along the middle line, 18 inches apart. The plank was laid along the centre line of the proposed canal.

Holes in the soil were made by means of a stick pushed through the holes in the plank ; in these holes dynamite was inserted. The depth of the holes and the amount of the charge vary with the nature of the soil and the size of the canal desired ; they are determined by trial. The procedure was continued along the length of the canal ; the longest length shot at one time was about 450 yards. An electric detonating cap was inserted into a stick of dynamite and this was placed in a loaded hole at the lower end of the line. A hundred yard length of duplex electric cable and a dry cell four-volt battery were used for detonation. The result of detonation was an open channel with somewhat irregular margins. The canals were cut from the outfall upwards. Sixty per cent. straight nitro-glycerine dynamite gave best results. This dynamite method is unsuitable in dry soil, and in semi-liquid slimy parts of the marsh the explosion did not provide an effective channel. In soil of the most suitable nature loading with one stick of dynamite 3 feet deep and 18 inches spacing will give a channel 6 feet deep, 3 feet wide at the bottom and 15 feet wide at surface level. In suitable soil the cost of excavating by dynamite averaged, in Palestine, four pence per cubic yard ; the cost of excavating by hand labour is ten times as much. The work by dynamite requires a comparatively small resident staff and is of course very much more expeditious than hand work. Both these considerations are of great importance in sanitating a malarious area.

N. W.

Rao (B. A.) & Sweet (W. C.). **Paris Green and Paddy.**—*Records of the Malaria Survey of India.* 1937. June–Sept. Vol. 7. Nos. 2 & 3. pp. 185–189.

During three years, observations were carried out in Mysore on the effects of Paris green dusting on rice crops, more especially with regard to the rice and straw yield of the crops. It has been stated that harm may result from dusting Paris green over the open flowers of the rice plant. The observations described show that this fear is groundless. The dusting was done in the morning, once weekly with a 1 per cent. Paris green mixture in road dust and wood ash, in quantities usually used for larval control in this area. When the yield of plots thus treated is compared with the yield of control plots no statistical evidence is forthcoming to show that the dusting had affected adversely, or otherwise, the yield of rice or straw. *N. W.*

Price (Julian P.). **Pernicious Malaria in Children : a Report of 24 Cases.**—*Southern Med. Jl.* 1937. Oct. Vol. 30. No. 10. pp. 991–996.

Of the 24 cases of pernicious malaria in children reported, three had haemoglobinuria, eighteen were of the algid or comatose type and three had profound anaemia associated with irregular fever and marked splenomegaly. One of the latter group was an infant who died at the age of one month, with anaemia, splenomegaly, jaundice and very numerous *vivax* parasites in the blood. Only 10 of the 24 patients were sent to hospital with a diagnosis of malaria and that in a part of South Carolina where physicians are accustomed to treat a great deal of malaria. Of the 24 patients, seven died, four within eighteen hours of admission. One boy aged 12 years was brought to

hospital 24 hours after the initial symptoms of headache and drowsiness; he was then in deep coma and died 12 hours later. For the treatment of these pernicious cases in children the author relies on quinine, generally administered intramuscularly. The paper gives an excellent clinical account of pernicious malaria in children. *N. W.*

KEHAR (N. D.) & HARBHAGWAN (S. A. S.). **Sedimentation Rate of Erythrocytes in Human and Monkey Malaria.**—*Records of the Malaria Survey of India.* 1937. June–Sept. Vol. 7. Nos. 2 & 3. pp. 131–145. With 5 graphs. [13 refs.]

The sedimentation rate of red blood cells was determined by the micro-method with the Hellige Sedimentassometer. Readings were taken at intervals of 10 minutes over an observation period of two hours. The length of the clear column above the sedimented red cells, in mm., was read with the help of a hand lens. This gives the result in mm. per cent. The observations were taken at room temperature. The monkeys used were young *S. rhesus*: observations were made on infections with *P. knowlesi*, *P. cynomolgi*, and *P. inui*. The conclusions of the authors are summarized as follows:—

A. *Monkey Malaria.*

"1. The average sedimentation rate in healthy *rhesus* monkeys is 2·0 mm. per cent.

"2. Observations made on monkey malarial infections during the normal, the incubation, and the disease periods indicate that there is a gradual increase in the sedimentation rate after parasites appear in the peripheral blood, and an abrupt and marked increase when parasitaemia is maximal.

"3. During chronic infections the sedimentation rate is slightly higher than normal, and when relapses occur there is a further abrupt rise in the sedimentation rate.

"4. Administration of specific treatment has a pronounced effect in lowering the sedimentation rate. When sufficient treatment is given to effect a temporary reduction in the number of parasites, the sedimentation values remain a little higher than normal, while in cases where sufficient treatment is given to effect what was believed to be a complete cure, the sedimentation rate soon reaches the normal level.

B. *Human Malaria.*

"1. The average sedimentation rate in normal human subjects was found to be 6·4 mm. per cent.

"2. The available evidence indicates that the changes in the sedimentation rate in human malaria are very similar to those observed in monkey malaria. It was found that there is a considerable increase in the sedimentation rate during the acute phases of the infection. From the data available there is no evidence that the rate of sedimentation differs appreciably in infections with *P. vivax* and *P. falciparum*.

"3. Similarly, the sedimentation rate in human malaria could not be definitely correlated with such clinical findings as body temperature and the degree of splenic enlargement." *N. W.*

MANWELL (Reginald D.). **The Problem of Species, with Special Reference to the Malaria Parasites.**—*Ann. Trop. Med. & Parasit.* 1936. Dec. 23. Vol. 30. No. 4. pp. 435–439. With 1 fig. [14 refs.]

The author discusses the various characters, such as size, character of pigment, number of merozoites, action on red blood corpuscles,

periodicity, host specificity and so on, which have been employed for the separation of malarial species and finds that only rarely is there any constancy in any one of these. Between the at present accepted species of bird-malarial parasite there is considerable overlapping in the characters, so that one is at a loss to define a species accurately. It would appear that a species of malarial parasite should be defined in genetic terms, as is the case with other living things. The author concludes that it should be a strain of parasite which does not hybridize with others in the invertebrate host and should possess certain definite and more or less unique morphological characters. *C. M. W.*

CORRADETTI (Augusto). Sul processo di formazione degli sporozoiti nelle cisti dei plasmodi. [**Method of Sporozoite Development in Oocysts of Malarial Parasites.**]—*Riv. di Parassit.* Rome. 1937. Apr. Vol. 1. No. 2. pp. 89–97. With 2 coloured plates. English summary.

It has been assumed that during the nuclear multiplication within the developing zygotes in the oocysts of malarial parasites in mosquitoes the cytoplasm of the zygote becomes vacuolated, the sporozoite nuclei ultimately being arranged on the surface of the zygote and vacuoles preparatory to the outgrowth of sporozoites. The author has come to the conclusion that there is no actual vacuole formation but merely an infolding of the surface of the zygote, giving rise to an appearance of vacuoles in sections. Each supposed vacuole, if followed through serial sections, will be found to communicate with the space between the zygote and the oocyst wall. *C. M. W.*

KLIGLER (I. J.) & MER (G.). **Studies on the Effect of Various Factors on the Infection Rate of *Anopheles elutus* with Different Species of *Plasmodium*.**—*Ann. Trop. Med. & Parasit.* 1937. Apr. 8. Vol. 31. No. 1. pp. 71–83.

In these studies, in order to conform as far as possible to natural conditions, only mosquitoes bred in containers out of doors were used. As a preliminary to infection of anopheles it was determined that all three malarial parasites exflagellated at 21°C., though there was a difference in the rates, *P. malariae* being the slowest. It was found that in the case of *P. falciparum* and *P. malariae* the infective carrier was not necessarily the one with the greatest number of gametocytes. The mosquitoes were found to have different degrees of susceptibility to different parasites as well as to the same parasite at different periods of the year. They are most susceptible to *P. vivax* and least to *P. falciparum*. As regards the rate of development, it appears that at a given temperature *P. vivax* develops more rapidly than *P. falciparum*, which ceases to develop at 15°C., while *P. vivax* still continues to develop, though slowly. The rate for *P. malariae* is lowest, complete development at 24°C. requiring 27 days, as against 18 days for *P. falciparum*. The three species of parasite have different inherent rates of anopheline development. It was determined that atebrin, like quinine, is incapable of depriving crescents of their capacity to develop in the mosquitoes. *C. M. W.*

RAFFAELE (G.). Sullo sviluppo iniziale dei parassiti malarici nell' ospite vertebrato. [**Initial Development of Malarial Parasites in the Vertebrate Host.**]—*Riv. di Malariologia.* Sez. I. 1937. Vol. 16. No. 3. pp. 185–198. [27 refs.] English summary.

Experiments conducted by author show that the blood of canaries which have been injected intravenously with large numbers of sporozoites of *P. praecox* is not infective to other canaries till after the expiry of three days. On the other hand the blood of birds injected subcutaneously with blood from an infected canary is infective to other birds from the first day. It would seem, therefore, that the sporozoites rapidly leave the peripheral blood and do not enter red blood corpuscles. Quantities of 250 cc. of blood taken from human beings after intravenous injection of sporozoites do not become infective to other human beings till after four days. It seems clear that the entry of sporozoites into reticulo-endothelial cells would account for these results.

C. M. W.

RODHAIN (J.) & VALCKE (G.). Schizogonie et phagocytose de "Plasmodium falciparum" dans la circulation périphérique. [**Schizogony and Phagocytosis of *P. falciparum* in the Peripheral Blood.**]—Reprinted from *Bull. Acad. Roy. Méd. de Belgique.* 1937. Jan. 30. pp. 15–32. With 6 figs. & 3 charts. [12 refs.]

Four cases of severe malignant tertian malarial infection are described, in all of which schizonts were present in the peripheral blood films. In three cases it was noted that the polymorphonuclear leucocytes, in particular the young forms, were actively phagocytic towards the malarial parasites, an activity which was comparable with that usually displayed by the monocytes. *C. M. W.*

FRIEDMANN (J.). Ueber einige Probleme der Morphologie atypischer Tertianaparasiten, insbesondere ueber das *Plasmodium ovale.* [**Morphology of Atypical Parasites of Tertian Malaria.**]—*Ztschr. f. Parasitenk.* 1937. Sept. 15. Vol. 9. No. 5. pp. 563–599. With 1 text fig. & 59 figs. on 7 plates. [41 refs.]

The author has studied in detail, from the point of view of the occurrence of abnormal forms of the malarial parasites, three strains of *Plasmodium vivax* which were employed for the treatment of general paralysis. The dried blood films investigated were stained by various modifications of the Romanowsky method and any abnormal forms of the parasite were carefully compared with corresponding normal stages. Departures from the normal were seen in all constituents of the parasites, cytoplasm, nucleus and pigment, while variations in the extent of the cytoplasmic and nuclear substances and the number of nuclei were also noted. With these changes certain parasites resembled *Plasmodium ovale* or the form described as *P. camarense,* or even malarial parasites of monkeys. Many of these peculiar types are illustrated in black and white reproductions of coloured drawings which are in the author's possession and which he states are open to inspection by those who wish to see them. *C. M. W.*

IVANIĆ (Momčilo). Neue Beiträge zur Kenntnis der promitotischen Kernteilung beim Tertianaparasiten (*Plasmodium vivax* Grassi et Feletti). [**Promitotic Nuclear Division of** *P. vivax.*]—*Zent. f. Bakt.* I. Abt. Orig. 1937. Jan. 15. Vol. 138. No. 3–4. pp. 254–263. With 22 figs.

The author describes and figures various stages in the nuclear division of *Plasmodium vivax* which takes place by a process of mitosis. The division, which is of the promitotic type, resembles that of many free-living amoebae of the genus *Vahlkampfia* and is characterized by the formation of a spindle within the nuclear membrane. The author thinks the appearances suggest a relationship between the malarial parasites and certain amoebae. He does not appear to have noted that many years ago SCHAUDINN described a modified mitosis in *P. vivax.* *C. M. W.*

ALEXEIJEW & KONACHOW. Ueber die Teilung des Kerns in den Makrogametozyten des *Plasmodium falciparum.* [**Division of the Nucleus in the Macrogametocytes of** *P. falciparum.*]—*Arch. f. Schiffs- u. Trop.-Hyg.* 1937. July. Vol. 41. No. 7. pp. 513–517. With 15 figs.

The authors have noted that in certain crescents from a number of *P. falciparum* infections evidence of binary division of the female nucleus occurs. There is elongation of the nucleus followed by its constriction into two parts. Around each daughter nucleus half the pigment granules are aggregated. From the presence in the blood films of small rounded forms of parasite, each resembling half a crescent, it is assumed that division of the nucleus is followed by division of the crescent. The meaning of this division is not clear, but it does not resemble entirely the parthenogenesis of the female gametocyte of *P. vivax* as described by SCHAUDINN, since there is no degeneration of one-half of the divided nucleus. *C. M. W.*

HAUER (August). Ueber neue Beobachtungen an einem *Plasmodium ovale*-Stamm. [**New Observations of a** *P. ovale* **Strain.**]—*Arch. f. Schiffs- u. Trop.-Hyg.* 1937. Jan. Vol. 41. No. 1. pp. 153–157. With 2 figs.

The author, working in Berlin, obtained a strain of *Plasmodium ovale* from the Hamburg Institute of Tropical Diseases for the purpose of treating general paralysis and other conditions. The strain was subjected by him, by blood inoculations, to a number of passages, during the first 22 of which the original typical morphology was retained. At the 23rd passage it was noted that abnormal forms began to appear. These were characterized by a greater enlargement of the stippled red blood corpuscles and a merozoite number of 10, 12 and 16. An infected red blood corpuscle, three times the normal size and containing two parasites each producing 16 merozoites, is figured. After a further 15 passages it was noted at the 38th passage that there were indications that the strain was returning to the normal *P. ovale* type. It seems that the parasite has a tendency to assume characters of both *P. vivax* and *P. malariae*, but this does not mean, as GIOVANNOLA holds, that *P. ovale* is merely a variety of *P. vivax.* *C. M. W.*

VOORHOEVE (H. C.). Diagnostic du paludisme au moyen de ponction sternale. [**Diagnosis of Malaria by Puncture of the Sternum.**]—*Haematologica.* 1937. Vol. 18. No. 7. pp. 739–747. With 5 figs. [27 refs.]

Since 1929, when ARINKIN published a description of his method of studying bone-marrow by sternal puncture, the procedure has demonstrated its utility in haematological research and in the diagnosis of disease of various types. The present publication describes two cases in which sternal puncture established the diagnosis of malaria, one quartan the other tertian. The blood in both cases had been previously examined repeatedly, both by thick drops and smears, but no malaria parasite had been found in either. The author clearly describes the simple operation of making the puncture, which is done under local anaesthesia. *N. W.*

VOLAVSEK (W.). Ueber die Henrysche Malariareaktion und ihre Beziehung zum Komplementtitre und zur Takata-Reaktion. [**Henry's Malaria Reaction and its Relation to Complement Titre and the Takata-Reaction.**]—*Wien. Klin. Woch.* 1937. Nov. 12. Vol. 50. No. 45. pp. 1551–1552. [15 refs.]

The author concludes from his observations that :—Henry's malaria reaction is always positive in cases of malaria-therapy ; the earliest appearance is after the third rigor and the latest after the sixth rigor. The non-specificity of the reaction, so far as it is of importance, limits itself to cases of liver damage, tuberculosis, carcinoma and syphilis. In cases in which Henry's reaction is strongly positive the estimation of complement and the Takata-reaction gives a positive result. Increase of the lability of the serum is of definite importance for the production of a positive reaction. *E. D. W. Greig.*

BRUMPT (E.) & CHORINE (V.). La réaction de Henry chez les poules infectées avec le *Plasmodium gallinaceum.* [**The Reaction of Henry in Fowls Infected with** *Plasmodium gallinaceum.*]—*Ann. Parasit. Humaine et Comparée.* 1937. July 1. Vol. 15. No. 4. pp. 372–379. [13 refs.]

The authors have tested the reaction of Henry in the case of serum of fowls infected or not with *P. gallinaceum.* It was found that the serum of normal fowls gave a reaction of an intensity which in the case of human malaria would have been regarded as positive. In infected birds the abundance of malarial pigment which characterizes this infection did not lead to an increase in intensity. It appears clear that malarial pigment is not in any way responsible for the reaction.

C. M. W.

GUNTHER (Carl). **Malaria and its Treatment by the General Practitioner.** [Correspondence.]—*Med. Jl. Australia.* 1937. Aug. 28. 24th Year. Vol. 2. No. 9. p. 367.

The author writes from New Guinea where, as medical officer of a gold dredging company, he has considerable experience in treating malaria, both in whites and natives. The synthetic remedies have given very disappointing results in his hands and he regards quinine as much superior to any other drug in the treatment and prophylaxis of malaria.

N. W.

MÜHLENS (P.). Chinin-Nebenwirkungen. [**Toxic Actions of Quinine.**] —*Arch. f. Schiffs- u. Trop.-Hyg.* 1937. Dec. Vol. 41. No. 12. pp. 710–715. With 2 figs.

A record of the experiences of the author in Hamburg with cases of quinine idiosyncrasy which he met with there. He has noted natural idiosyncrasy several times in recent years. Possibly this hypersensitiveness to quinine is inherited. So small a dose as 0·1 gm. of quinine hydrochloride may produce unpleasant symptoms in such persons. In some cases he has noted palpitation of the heart, fainting attacks, in others urticaria, oedematous swellings of skin and mucous membranes. Haemorrhages have been a notable feature in several of the cases; one case which ended fatally had severe bleeding from the nose and bowel, in others haemorrhages into the skin and mucous membranes were observed. Since the use of atebrin, atebrin-musonate and plasmoquine in the treatment of cases of malaria in Hamburg the author has not observed the occurrence of haemorrhages in his cases. For prophylaxis of malaria atebrin and plasmoquine are preferred to quinine. *E. D. W. Greig.*

OESTERLIN (M.). Studien zur Chemotherapie der Malaria. [**Studies in Chemotherapy of Malaria.**]—*Arch. f. Schiffs- u. Trop.-Hyg.* 1937. Dec. Vol. 41. No. 12. pp. 720–728. [26 refs.]

The work of SCHULEMANN, SCHÖNHÖFER and WINGLER on methylene blue as well as his own unpublished work with Giemsa are referred to. In cell metabolism there are two processes at work, a respiratory and fermentation metabolism. Methylene blue has been shown to increase the respiratory metabolism of the red blood cells of mammals and at the same time lowers the output of lactic acid which originates from the fermentation metabolism. The author found that, as methylene blue had a very slight action in bird malaria, it was not suitable for solving the problem of the respiratory metabolism of the parasite, so he employed plasmoquine in his experiments on bird malaria. From his investigations he concludes that :—the activity of methylene blue, which is an anti-gametocidal agent, can be traced to its action on the respiratory metabolism of the cell; the action of plasmoquine is increased by the addition of products, *e.g.*, glucose, which play an important part in cell respiration; on the other hand the action of quinine is unaltered by the addition of such respiratory metabolic products. *E. D. W. Greig.*

WEISE (W.). Untersuchungen ueber die Resorption und Ausscheidung des Atebrins. I. Methoden zur Bestimmung des Atebrins in Harn, Stuhl und Blut. [**Methods for the Estimation of Atebrin in Urine, Stool and Blood.**]—*Arch. f. Schiffs- u. Trop.-Hyg.* 1937. Dec. Vol. 41. No. 12. pp. 715–720.

In this paper the author gives full details of the chemical methods employed by him for the estimation of atebrin in the urine, stools and blood of patients. He criticizes the method of WATS and GHOSH for the estimation of atebrin in urine in which amyl alcohol is used for extraction, because the latter may extract other pigments, *e.g.*, urobilin, as well as atebrin, and so vitiate the results. Those interested should read this paper in original as it is not possible to summarize the details of the analytical methods employed by the author.

E. D. W. Greig.

TIMPANO (Pietro). Sul miglior modo d'impiego dell' adrenalina endovenosa nella cura della malaria acuta e del kala-azar. [**Best Method of using Adrenalin Intravenously in the Treatment of Malaria and Kala Azar.**]—*Policlinico.* Sez. Prat. 1937. Aug. 16. Vol. 44. No. 33. pp. 1571–1572.

The author writes of the good results he has had in the treatment of malaria and kala azar by Ascoli's method, which consists in administering adrenalin as well as the specific drug. If quinine is given intramuscularly 2 to 3 hours before an attack is due in malaria, adrenalin should be administered 1 to 2 hours later. If, however, quinine hydrochloride is given intravenously, then adrenalin is given at the same time. In kala azar the treatment is similar. The adrenalin is given 1 to 2 hours after intramuscular injection of the antimony compound, or at the same time when potassium or sodium antimony tartrate is given intravenously. *C. M. W.*

NOCHT (Bernard) & MAYER (Martin). **Malaria. A Handbook of Treatment, Parasitology and Prevention.**

This book is reviewed on p. 163.

KORTEWEG (P. C.). De behandeling der verschillende vormen van malaria. [**Treatment of the Different Forms of Malaria.**]—Reprinted from *Aanwinsten op Diagnostisch en Therapeutisch Gebied.* Tweede Bundel. pp. 518–566. [Refs. in footnotes.]

MANWELL (R. D.) & HEWITT (R. I.). **Experiments in the Cultivation of the Avian Malaria Parasites.**—*Amer. Jl. Trop. Med.* 1937. May. Vol. 17. No. 3. pp. 407–412. [11 refs.]

Attempts to cultivate *Plasmodium praecox* of birds did not give very satisfactory results, though it was shown that under favourable conditions the introduced parasites reproduce for one and possibly for several generations. The parasites in the culture could infect canaries on the fifth day. The most satisfactory results were obtained at a temperature of 25°C. in capillary tubes containing blood which had been added to a small quantity of heparin to prevent coagulation. *C. M. W.*

MISSIROLI (A.). Sullo sviluppo degli sporozoiti di *Plasmodium praecox* (*relictum*). [**Development of Sporozoites of** *P. praecox* (*relictum*).]—*Riv. di Malariologia.* Sez. I. 1937. Vol. 16. No. 3. pp. 181–184. English summary (4 lines).

The author has shown that sporozoites of *P. praecox* from the body cavity of infected mosquitoes, as well as sporozoites from mature malarial cysts, will produce infection when injected into canaries. It therefore does not appear that sporozoites must undergo some form of maturation in the salivary glands before they become infective. *C. M. W.*

BRUMPT (E.). Schizogonie parfois intense du *Plasmodium gallinaceum* dans les cellules endothéliales des poules. [**Schizogony of** *P. gallinaceum* **in Endothelial Cells.**]—*C. R. Soc. Biol.* 1937. Vol. 125. No. 22. pp. 810–813.

The author states that he has been able to confirm the observation of JAMES and TATE of the occurrence of schizonts within endothelial

cells in *P. gallinaceum* infections produced both by blood inoculations and mosquito bites. The occurrence of these schizonts is very irregular and their number bears no relation to the number of parasites in the peripheral blood. Sometimes one organ contains many, sometimes another organ, while in other cases long search fails to reveal any. This failure does not mean that none may be present, for it is notoriously difficult to find schizonts in many heavy *Haemoproteus* or *Leucocytozoon* infections. The irregularity of their occurrence leads the author to suspect that they do not represent an essential stage in the life cycle of the malarial parasite, but are more the result of the accidental ingestion of certain forms by endothelial cells. The history of the discovery of these endothelial forms is given, the credit of first seeing and describing them being undoubtedly due to RAFFAELE who, in 1934, reported such stages in *P. elongatum*. A little later he encountered similar forms in *P. praecox* infections. Several instances where earlier writers had evidently seen these forms without realizing their significance are mentioned. *C. M. W.*

BRUMPT (E.). Etude expérimentale du *Plasmodium gallinaceum*, parasite de la poule domestique. Transmission de ce germe par *Stegomyia fasciata* et *Stegomyia albopicta*. [**Experimental Transmission of** *P. gallinaceum* **by** *Aëdes aegypti* **and** *A. albopicta*.]—*Ann. Parasit. Humaine et Comparée.* 1936. Nov. 1. Vol. 14. No. 6. pp. 597–620. With 10 figs. [12 refs.]

In this paper the author gives an account of an experimental study of the malarial parasite, *P. gallinaceum*, which was described by him from fowls in 1935. He has found it possible to transmit the infection to fowls of all kinds and in addition to the goose, pheasant, partridge and peafowl. On the other hand the duck, guinea fowl, pigeon, dove, quail, buzzard, canary, sparrow, java sparrow, chaffinch and heron (*Bubulcus ibis ibis*) proved refractory. The infection in the fowl is at times very intense, as many as 80 or 90 per cent. of the red blood corpuscles harbouring parasites. In spite of this there never appears to be any rise in the temperature and, indeed, no signs of illness till about two days before death, if this occurs. As regards mosquitoes, complete development occurs in *Aëdes aegypti*, which easily transmits the infection. The same remark applies to *Aëdes albopicta*, but not to species of *Culex*, in which no development could be obtained. The infection in *A. aegypti* is sometimes exceedingly heavy, as many as 1,650 oocysts being counted on one stomach. Owing to the very limited distribution of the parasites in the fowl the author believes that some other bird will be found to be the natural host. *C. M. W.*

ZIEMANN (H.). Kurzer Beitrag zu den Beziehungen zwischen der Entwicklung der Hämosporidien und dem retikuloendothelialen System. [**Relation of Development of Haemosporidia to the Reticulo-endothelial System.**]—*Zent. f. Bakt.* I. Abt. Orig. 1937. Oct. 7. Vol. 140. No. 1. pp. 63–65.

In connexion with the discovery of intraendothelial stages of schizogony of bird-malarial parasites, which have recently attracted considerable attention, the author points out that in 1898, when in Heligoland, he noted that he found schizonts of *Haemoproteus* only in

the spleen and bone marrow of the birds he examined. He does not appear to have made any mention of such forms in *Plasmodium* infections. *C. M. W.*

ALBRICHT (I. C.) & NIEUWENHUYSE (C.). De werkzaamheid van methyleenblauw op vogelmalaria. [**Action of Methylene Blue on Bird Malaria.**]—*Nederl. Tijdschr. v. Geneesk.* 1937. Jan. 30. Vol. 81. No. 5. pp. 483–488. With 1 chart. English summary (9 lines).

Methylene blue is stated to have little action on *Plasmodium praecox* in canaries but a marked action on the halteridium (*Haemoproteus oryzivorae*) infection of Java sparrows. The dye has a much better action when administered intramuscularly than when given by mouth. Methylene blue in combination with quinine is found to be much more effective on *P. praecox* infections than quinine alone. It seems, therefore, that for the treatment of human malaria it is worth while investigating the effect of supplementing quinine therapy with intramuscular injection of methylene blue. *C. M. W.*

RODHAIN (J.) & HENDRIX (H.). Essais de traitement du paludisme des oiseaux et des singes au moyen du "Paludex." [**Trials of "Paludex" in Bird and Monkey Malaria.**]—Reprinted from *Bull. Inst. Colon. Belge.* 1937. Vol. 8. pp. 137–150.

The chemical compound which has been given the trade name "Paludex" has been reported upon favourably for the treatment of malaria in the Belgian Congo. Administered alone or in combination with quinine it is said to cure all forms of malarial infection. The authors of the present paper, working in Belgium, have tested the drug in bird malaria (*P. cathemerium*), halteridium (*H. oryzivorae*) and monkey malaria (*P. knowlesi* and *P. gonderi*) without being able to demonstrate any favourable action. They conclude that further observations on human malaria in hyperendemic areas are required before the value of "Paludex" can be estimated. *C. M. W.*

SINTON (J. A.). **Some Problems in the Host-Parasite Relationship in the Malarial Infections of Man and Other Animals.**—*Records of the Malaria Survey of India.* 1937. Mar. Vol. 7. No. 1. pp. 85–91. [17 refs.]

The author emphasizes the importance of a study of the three malarial parasites (*P. knowlesi*, *P. cynomolgi* and *P. inui*) of *Silenus irus* in experimental infections in *Silenus rhesus*, for many of the results obtained appear to have parallels in the case of human malaria. One important outcome of this study is the realization that one morphological species may be made of a number of different races or strains which do not protect to any extent against each other, vary in virulence and respond differently to therapeutic agents. Similar races have been met with in human malaria. The host itself may have a natural resistance or an acquired resistance. Thus *Silenus irus* appears to be naturally tolerant of a *P. knowlesi* infection which is usually fatal, if unchecked, in *S. rhesus*. Acquired resistance is seen in the resistance to superinfections of animals with a chronic infection of the same strain. The nature of this resistance is probably due, at least to some

extent, to the already stimulated macrophages acting in conjunction with an opsonin. Certain individuals being naturally more resistant than others, it would seem that in endemic areas of human malaria the highly susceptible children die early, while the more resistant ones survive and ultimately propagate their kind. *C. M. W.*

RODHAIN (J.) & VAN DEN BERGHE (L.). Contribution à l'étude des plasmodiums des singes africains. [**Plasmodia of African Monkeys.**] —*Ann. Soc. Belge de Méd. Trop.* 1936. Dec. 31. Vol. 16. No. 4. pp. 521–531. With 12 figs. on 3 plates. [15 refs.]

The author discovered a malarial parasite in a monkey, *Cercocebus galeritus agilis* sent to Belgium from the Congo. It was found possible to transmit the infection to monkeys of the genera *Papio* and *Macacus* but not to man. Infection in the monkeys could be cured by atebrin and plasmochin and such cured monkeys showed no immunity to *P. knowlesi*. During the growing phase of the parasite it shows some irregularity in shape but brings about little enlargement of the red cell, which becomes pale with the increase in size of the parasite and dotted with irregular bluish spots which are difficult to stain. These spots do not resemble the red Schüffner dots of *P. vivax* infections. The merozoites are ten to sixteen (average twelve) in number. The pigment is of a dark brown colour. The gametocytes are round and filled with granules of pigment. The cycle of development occupies 48 hours. As regards the identity of the parasite it resembles most closely *P. inui*, but this has a 72 hours cycle. The parasite appears to be identical with one described by GONDER and v. BERENBERG-GOSSLER in 1909 from *Cercocebus fuliginosus*. This was regarded by SINTON as a variety, *gonderi*, of *P. inui*. In view of the difference in the cycle time it would seem better to regard the parasite as a distinct species, to which the name *Plasmodium gonderi* may be given.

C. M. W.

WEYER (Fr.). Versuche zur Uebertragung der Affenmalaria durch Stechmücken. [**Attempts to transmit Monkey Malaria by Mosquitoes.**]—*Arch. f. Schiffs- u. Trop.- Hyg.* 1937. Jan. Vol. 41. No. 1. pp. 167–172. With 4 figs.

By feeding Anopheles (*A. maculipennis*) on monkeys the author has shown that complete development of three species of monkey malarial parasite (*P. knowlesi*, *P. cynomolgi* and *P. inui*) will take place. Though the sporozoites in the salivary glands appeared to be quite normal, injection of these into monkeys was not followed by infection. The reason for this is not clear. *C. M. W.*

JOLLY (A. M. D.), LAVERGNE & TANGUY. Etude expérimentale du *Plasmodium knowlesi* chez le singe et chez l'homme. [**Experimental Study of** *P. knowlesi* **in Monkeys and Man.**]—*Ann. Inst. Pasteur.* 1937. Mar. Vol. 58. No. 3. pp. 297–325. With 10 graphs, 1 fig. & 1 coloured plate. [20 refs.]

This is a careful study of *Plasmodium knowlesi* in *Macacus rhesus*, *M. cynomolgus*, *Cynocephalus papio* and man. Generally the findings are in agreement with other descriptions of this parasite, but one or two special points may be noted. The cycle of the parasite was found

to be 20 hours instead of the usually accepted 24 hours. The stippling of the red cell is very variable as regards the number and size of the granules and the stage in the growth of the parasite at which they appear. All three monkeys are equally susceptible, the infection leading to death in all cases, with the exception that after passage through man the virulence has become so lowered that in monkeys (*C. papio*) inoculated from man, only a mild chronic type of infection is produced. It is noted that when at the end of a cycle of development the fully grown schizonts disappear from the blood to be replaced by young ring forms, the gametocytes, hitherto very numerous, also disappear, only to reappear again towards the end of the next cycle. This fact, combined with indications of nuclear division and degeneration of one portion of the nucleus in the gametocytes, leads the authors to consider the possibility of a pathogenesis of the gametocytes. In man the infection is of a mild type and difficult to maintain by direct passage from man to man, owing to a tendency to spontaneous recovery. The paper is illustrated by a coloured plate showing clearly the character of the parasite. *C. M. W.*

MALAMOS (Basilios). Ueber eine Beobachtung von Erythrozyten-Agglomeration in Ausstrichpräparaten bei Affen-Malaria (*Plasmodium knowlesi*). [**Red-cell Agglomeration in Smears from** *P. knowlesi* **Infection of Monkey.**]—*Riv. di Malariologia.* Sez. I. 1937. Vol. 16. No. 2. pp. 91–98. With 4 figs. on 2 plates.

It was noted that the blood of a monkey infected with *P. knowlesi* showed auto-agglutination of the red cells and that a large number of the cells in each clump contained half-grown parasites. The clumping persisted after atebrin treatment, which resulted in a reduction in the number of infected cells in each clump. The auto-agglutination occurred not only in the blood from the skin but also in that from the saphenous vein and was seen after death in the blood of the heart and other organs. Of 200 infected monkeys studied, this is the only instance in which the phenomenon was obtained. *C. M. W.*

MALAMOS (B.). Immunitätsfragen bei experimenteller Malaria (Affenmalaria). [**Immunity in Experimental Monkey Malaria.**]—*Arch. f. Schiffs- u. Trop.-Hyg.* 1937. Jan. Vol. 41. No. 1. pp. 162–166.

A study of immunity to malaria in experimentally infected monkeys has been carried out with the object of throwing light on the question of immunity to man. It has been clearly demonstrated that a high degree of acquired immunity can be produced in monkeys by repeated inoculations or superinfections with malarial parasites. This immunity breaks down if splenectomy is performed, while it is not only strictly specific but limited to homologous strains of the same parasite. Though the immunity disappears after treatment and complete eradication of parasites to the extent that reinfection can then be carried out, the author believes that some degree of immunity remains, as judged by the decreasing intensity of the infections in certain cases. Though immunity is lost after splenectomy or blockage of the R.E.S. a subsequent infection may be followed by a further acquired immunity which, however, is more slowly developed in the case of *Plasmodium knowlesi* infections than in those due to *P. cynomolgi* or *P. inui.*

Very rarely a monkey is found to have a natural immunity. Thus, one *Macacus cynomolgus* proved refractory to numerous inoculations with *P. knowlesi.* *C. M. W.*

COGGESHALL (L. T.) & KUMM (H. W.). **Demonstration of Passive Immunity in Experimental Monkey Malaria.**—*Jl. Experim. Med.* 1937. Aug. 1. Vol. 66. No. 2. pp. 177–190. With 6 charts. [13 refs.]

Though *P. knowlesi* infections in *Macacus rhesus* are always fatal, it is possible to convert this acute infection into a chronic one by the early administration of antimonial drugs. The serum of monkeys with a chronic infection injected into monkeys with an acute attack has a definite depressing effect on the course of the disease. Similar results were obtained with *P. inui* infections. *C. M. W.*

COGGESHALL (L. T.). **Splenomegaly in Experimental Monkey Malaria.**—*Amer. Jl. Trop. Med.* 1937. July. Vol. 17. No. 4. pp. 605–617. With 2 figs. [12 refs.]

By means of a specially designed oncometer the author has been able to study the variations in size of the spleen in monkeys inoculated with malaria. The parasites used were *P. knowlesi* and *P. inui.* Though there is an immediate response to malarial inoculation in the form of an increase in size of the spleen, it is noteworthy that the greatest degree of splenomegaly is associated with the milder and more slowly developing infections. In the case of *P. knowlesi* infections the splenomegaly increases as the infecting dose of parasites diminishes. Similarly the more slowly developing *P. inui* gives rise to a more marked splenomegaly than *P. knowlesi.* Repeated injections of parasites caused an accelerated splenomegaly. *C. M. W.*

YELLOW FEVER.

i. JAMES (S. P.). Renseignements sur la fièvre jaune reçus au cours des six mois finissant le 31 mars 1937. [**Information on Yellow Fever received during the Six Months ending March 31st, 1937.**]—*Bull. Office Internat. d'Hyg. Publique.* 1937. June. Vol. 29. No. 6. pp. 1129–1133.

ii. SOREL. Les cas de fièvre jaune dans les colonies françaises en 1936. [**Cases of Yellow Fever in French Colonies in 1936.**]—*Ibid.* pp. 1134–1138.

iii. BABLET (J.). Sur la lésion dite " nécrose hyaline de Councilman." [**The So-called " Hyaline Necrosis of Councilman."**]—*Ibid.* pp. 1139–1144.

iv. FINDLAY (G. M.) & MACCALLUM (F. O.). Vaccination contre la fièvre jaune au moyen du virus pantrope atténué employé seul. [**Vaccination against Yellow Fever by the Use of an Attenuated Pantropic Virus alone.**]—*Ibid.* pp. 1145–1149.

v. BULLETIN DE L'OFFICE INTERNATIONAL D'HYGIÈNE PUBLIQUE. 1937. June. Vol. 29. No. 6. pp. 1150–1158.—Sur les possibilités de transport des moustiques par les aéronefs. I.—Les insectes dans les aéronefs [SYMES (C. B.)]. II.—Mesures antimoustiques aux aérodromes. Désinfestation des aéronefs en Ouganda [DE BOER (H.)]. [**The Possibilities of the Transport of Mosquitoes by Aircraft. I. Insects in Aircraft. II. Antimosquito Measures at Aerodromes. The Disinfestation of Aircraft in Uganda.**]

vi. BULLETIN DE L'OFFICE INTERNATIONAL D'HYGIÈNE PUBLIQUE. 1937. June. Vol. 29. No. 6. pp. 1159–1185. With 3 charts.—Informations sur le degré d'infestation des pays d'Afrique par les moustiques vecteurs de la fièvre jaune. I. Colonies et Protectorats Britanniques et Territoires sous Mandat Britannique [STANTON (A. T.)]. II. Congo Belge [VAN CAMPENHOUT (Em.)]. III. Colonies Françaises et Territoires sous Mandat Français [SOREL]. [**Information on the Degree of Infestation of African Countries by Mosquitoes Capable of carrying Yellow Fever. I. British Colonies, Protectorates and Mandated Territories. II. The Belgian Congo. III. French Colonies and Mandated Territories.**]

i. The number of cases of yellow fever during the six months ending 31st March, 1937, are indicated in the following table.

South America.

Country	State	No. of localities with cases	No. of cases	No. of deaths
Brazil	Matto Grosso ...	4	25	9
	São Paulo ...	11	30	30
	Parana	1	2	2
	Minas Geraes ...	9	21	21
	Territ. d'Acre ...	1	1	1
Colombia	—	4	10	6

Africa.

Country	State	No. of localities with cases	No. of cases	No. of deaths
French West Africa	Dahomey	1	1	1
	Ivory Coast ...	2	3	2
	Senegal	4	7	5
	French Sudan ...	3	4	3
French Equatorial Africa	Gabon	1	2	1
British West Africa	Gold Coast ...	3	11	11
	Nigeria	3	3	2
	Sierra Leone ...	1	1	0

The author discusses recent literature on the epidemiology with special reference to the possibility of vertebrate hosts other than man serving as reservoirs of the infection, and refers to FINDLAY's observation that 20 out of 88 monkeys caught in endemic areas in Africa gave positive protection tests whilst the sera of monkeys from Kenya, India and Java were negative. The specificity of the protection test seems to be somewhat doubtful when applied to other animals such as cattle, for Findlay obtained the following results with their sera, using the intraperitoneal method of mouse protection against yellow fever virus.

Country of Origin	No of sera tested	Number protecting	Number not protecting
England	119	1	118
France	12	0	12
India	40	3	37
Sierra Leone	16	1	15
Gold Coast	14	0	14
Kenya	88	12	76
Uganda	22	13	9
Anglo-Egyptian Sudan ...	30	3	27
Total ...	341	33	308

ii. The author summarizes the records of the cases of yellow fever occurring in French Colonies during 1936, 24 cases as compared with 14 the previous year. Eighteen of these were Europeans with 13 deaths, 4 were Syrians and 2 natives, all fatal. The difficulty of finding the source of the infection is emphasized by giving histories of some of these cases. One missionary who had lived 30 years in Africa, on various occasions in the midst of yellow fever epidemics, without showing any signs of infection, remained in Paris for one year and on his return to the French Sudan died of yellow fever within a month. Of especial interest is the record of a patient who had been vaccinated against yellow fever by Dr. LAIGRET on August 2nd, 1934, and on August 25th and September 27th by Dr. DABBADIE. She became ill on October 2nd, 1936, and died of typical yellow fever on the sixth day.

The immunity in this case had not lasted more than two years, for a specimen of the serum collected at the beginning of the attack gave a negative protection test. It would seem necessary to vaccinate at intervals of either 18 months or possibly every year. The author calls attention, however, to the case of a European woman who, after being inoculated with egg-coated vaccine, showed a characteristic reaction on the sixth day, and yet her blood collected on the 42nd day showed no immunological properties against yellow fever virus in mouse protection tests.

iii. The necrotic changes in the hepatic cells in yellow fever first described by COUNCILMAN as "hyaline bodies," and usually known under the more general term "hyaline necrosis," have been called into question as being diagnostic for the disease. The author discusses the problem and recommends that the use of the terms "hyaline bodies" and "hyaline necrosis" should be abandoned, as they may be confused with the degeneration processes produced experimentally by various toxic agencies.

The necrosis observed in yellow fever, however, is quite different from any of these other types. The cell shows massive coagulation, giving it a globular and contracted appearance, with a homogeneous and acidophile cytoplasm. The general presence of fine vacuoles indicates fatty degeneration preceding the necrosis, and especially ordinary staining does not show any nuclear structure. The chromatin has either disappeared or become an amorphous mass without any affinity for ordinary haematoxylin, and is evidently degenerate. The author prefers to refer to the hyaline bodies as globular cells with nuclear chromatolysis, and considers that there is good evidence that these changes furnish the best known histological method of diagnosis. The results of the histological examination of 55 specimens of liver are then given and shown to agree generally with the conclusions arrived at by the clinical records of the cases.

iv. The authors describe the results of the vaccination, without the use of immune serum, of 65 persons with attenuated pantropic virus, which had been employed previously in 1,200 vaccinations in London, Paris, New York and Rio de Janeiro. The objections to the use of the neurotropic strain of virus without immune serum are well known, and it is considered that the attenuated pantropic strain fulfils more exactly the necessary conditions for use in vaccination.

The inoculation of monkeys subcutaneously, intraperitoneally or intracerebrally, produces only a short febrile reaction, and after more than 200 tissue culture passages the strain is now more pathogenic for the hedgehog. Intrahepatic passages in monkeys have not augmented the virulence of the strain, and on the other hand its neurotropic properties do not seem to differ from those of the original strain. The virus in the circulating blood does not seem to be transmissible by mosquitoes [see below, p. 124]. The use of tissue culture for virus reduces the risk of contamination with such a virus as lymphocytic chorio-meningitis, although the author states that in spite of many examinations he has never found this virus in either mice or fowl embryos in England.

The results of the 65 vaccinations with this tissue culture virus alone indicate that it produces a very slight reaction, sometimes a slight headache on the third or fourth day after vaccination, which in two cases lasted for 48 hours. Similar results have also been obtained

by STEFANOPOULO, using a similar virus in Paris. After intervals of three to four weeks, positive mouse protection tests were obtained with the sera of vaccinated persons.

v. A discussion of the various insects that may be transported by aircraft and their methods of entry and disinfestation.

The following mixture is recommended for use in aeroplanes, as it is non-inflammable and does not damage any of the fittings, nor is it in any way an irritant to the persons applying it.

Concentrated extract of Stratford Allen pyrethrum ...	1 part
White liquid paraffin of good quality	16 parts
Carbon tetrachloride	68 ,,

The dose is 20 cc. per 1,000 cubic feet ($28m^3$) allowed to act for 5 to 10 minutes. The author advises the adoption of the following measures for aircraft :—

Closing the cabin windows immediately after landing. Keeping all doors and ventilators closed except during necessary operations. Disinfestation of all parts of the apparatus immediately after leaving each aerodrome. Notification in advance to the sanitary authorities at each aerodrome of the time of arrival. The periodic fumigation by means of a bactericidal and insecticidal gas or vapour.

The second part of the article comprises notes on antimosquito measures at aerodromes and the methods used for the disinfestation of aircraft at the Entebbe aerodrome in Uganda. This aerodrome has no dwelling places of any kind within 200 yards of the landing ground. On arrival all aeroplanes are carefully disinfected whether going north or south. Since no positive immunity reactions for yellow fever have been obtained within a radius of 80 miles and also *Aëdes aegypti* is absent from the aerodrome, there seems no possibility of any infected mosquito entering an aeroplane at Entebbe.

Similar measures are being enforced at Laropi on the Nile, and Port Bell on the Victoria Nyanza, where two new aerodromes are being constructed.

vi. A useful summary of the prevalence of mosquitoes capable of transmitting yellow fever in various African colonies. The information is mainly in the form of tables giving the larval index of inspected houses, and shows that *Aëdes aegypti* is the most dominant and widespread species throughout all these colonies. In Sierra Leone the proportions during 1935 were *Culex* 19·9, *Aëdes aegypti* 71·1, and Anophelines 8·3 per cent. In the Gambia, it is estimated that in small villages the larval index is often higher than 50 per cent. The reports from the Gold Coast, Kenya, Tanganyika, and Nyasaland, all indicate the prevalence of *Aëdes aegypti*, and in certain parts of Tanganyika the larval index has risen between 1933 and 1936. In Nyasaland 18 species of possible carriers are listed, together with notes on the habits of the more common species.

With reference to the Belgian Congo, the *Aëdes* index for Léopoldville during 1934 and 1935 shows that the numbers of infected houses are much commoner in the European than the native quarters.

The French report includes tables showing variations in the *Aëdes* index during the last six months of 1936 for Dakar, Senegal, French Guinea, Ivory Coast, Dahomey, French Sudan, Togoland and the Cameroons. In all these regions *Aëdes* is prevalent and the report shows the necessity for continual precautions against these potential vectors of yellow fever. *E. Hindle.*

SOPER (Fred L.). **The Geographical Distribution of Immunity to Yellow Fever in Man in South America.**—*Amer. Jl. Trop. Med.* 1937. July. Vol. 17. No. 4. pp. 457–511. With 16 maps. [23 refs.]

A report giving the results for South America (Brazil, Paraguay, Bolivia, Chili, Peru, Ecuador, Colombia, Venezuela, British, Dutch and French Guiana) of the world survey of yellow fever immunity distribution, carried out by the Rockefeller Foundation with the co-operation of the governments concerned. The report should be consulted in its entirety by those interested in the subject, as it comprises numerous tables giving details of the results of protection tests with sera collected from these various countries.

The author's main conclusions are that the reported incidence of yellow fever is no safe index of its occurrence in endemic zones, and although visible urban and maritime outbreaks may decline and even cease for a time, there is a vast silent reservoir of infection in the interior of South America. Yellow fever infection due to *Aëdes aegypti* has been much more widespread than was believed, even in areas under special observation, and fever transmitted by this mosquito did not spontaneously disappear following the organization of anti-mosquito campaigns in the principal centres of population.

Yellow fever endemicity instead of being limited to the coast of North-East Brazil, extends to all Brazil, except a few of the southern States, and to Bolivia, Paraguay, Peru, Ecuador, Colombia, and Venezuela, involving many districts in which *Aëdes aegypti* does not exist.

Widely varying percentages of immunes have been found in proved endemic areas, depending upon whether transmission is due to *Aëdes aegypti* or occurs in its absence.

There is no evidence of recent outbreaks of the disease in any of the important Pacific or Caribbean ports of South America. *E. H.*

SOPER (Fred L.). Epidemiologia da febre amarella.—*Folha Med.* 1937. July 25. Vol. 18. No. 21. pp. 423–430. [24 refs.]

STEFANOPOULO (G. J.). Résultats fournis par l'application du test de séroprotection contre la fièvre jaune, sur les indigènes de l'Afrique Equatoriale française (Juillet 1935–Janvier 1936). [**Results furnished by the Application of the Serum Protection Test against Yellow Fever, on Natives of French Equatorial Africa (July 1935–January 1936).**]—*Ann. de Méd. et de Pharm. Colon.* 1937. Jan.–Feb.–Mar. Vol. 35. No. 1. pp. 74–87. With 2 maps. [Refs. in footnotes.]

An account of the author's investigations on the epidemiology of yellow fever in French Equatorial Africa, in which he gives details of the results of mouse protection tests with the sera of natives collected in various parts of the region. The results are of especial interest since no case of yellow fever has ever been notified from among any of the white inhabitants of this Province. Nevertheless the percentage of sera giving positive protection tests was found to reach as high as 46·1 per cent. in the Middle Congo and 55 per cent. in one department of Tchad Region. Moreover, the classification of the results according to age groups shows that the disease must still be present, since in some departments the infants gave positive protection tests.

The author discusses the specificity of the test and gives a list of 24 diseases and also various antisera, all of which gave negative results when tested for the presence of protective bodies against yellow fever virus in mice. His evidence supports the generally accepted view that the test is sufficiently specific to be of value in determining the distribution of yellow fever. *E. H.*

PELTIER (M.), DURIEUX (C.) & MARTIN (J.). Etude rétrospective d'une épidémie ayant sévi en 1932 dans la région nord de la Guinée française. [**A Retrospective Study of an Epidemic occurring in 1932 in the North of French Guinea.**]—*Bull. Soc. Path. Exot.* 1937. Oct 13. Vol. 30. No. 8. pp. 608–611.

During 1932 an epidemic broke out in three districts in the North of French Guinea with a total of 8,600 cases and 1,540 deaths in three months. The epidemic was supposed to be due to influenza without pulmonary symptoms, but the authors bring forward evidence, including the results of recent protection tests, in support of their view that this was probably an outbreak of yellow fever. *E. H.*

WALCOTT (A. M.), CRUZ (Edgar), PAOLIELLO (Adhemar) & SERAFIM (José), Jr. **An Epidemic of Urban Yellow Fever which Originated from a Case contracted in the Jungle.**—*Amer. Jl. Trop. Med.* 1937. Sept. Vol. 17. No. 5. pp. 677–688. With 2 maps. [11 refs.]

A detailed description of a small epidemic of yellow fever occurring in the town of Cambará, Paraná, during the first three months of 1936. The outbreak was limited to nine cottages in a small area infested with *Aëdes aegypti*, and of the 47 inhabitants, 25 were attacked by the urban form of the disease. The authors bring forward convincing evidence in support of their view that this epidemic originated from a labourer who had acquired infection when working in the jungle, but passed his illness in one of the above mentioned houses. All the nine timber cutters, with whom this labourer had been working, furnished histories of a disease clinically diagnosed as jungle yellow fever, and the blood of the five examined all gave positive protection tests. None of them had visited Cambará or was known to have been in any place where urban yellow fever was known to exist.

The interval from the onset of this jungle case to the development of the urban cases, presumably transmitted by *Aëdes aegypti*, was 17 days, which corresponds to the usual incubation period in the mosquito plus the additional incubation period in man. The first three cases occurred in close neighbours on the same premises, and the epidemic developed among persons living in near-by houses who had not been absent from Cambará for three weeks previously. The outbreak was of the usual urban type, two cases being fatal, and promptly subsided upon the introduction of adequate measures against *Aëdes aegypti*. *E. H.*

FLU (P. C.). Enkele beschouwingen over gele koorts in Suriname. [**On Yellow Fever in Surinam.**]—*Geneesk. Tijdschr. v. Nederl.-Indië.* 1937. June. Vol. 77. No. 23. pp. 1411–1422.

Surinam, in Dutch Guiana, was visited in 1902 and 1908 by epidemics of yellow fever. In the first of these Flu was himself a sufferer from an

abortive form of the disease and his observations, here recorded, relate to personal knowledge of the epidemics, interpreted in the light of modern knowledge and research. The thesis maintained by him is that an atypical, usually unrecognized, form of the disease exists endemically and that it flares up in epidemic and typical form with the incursion of considerable numbers of susceptible persons. The facts on which this contention is based are, briefly, the following:—(1) Both the epidemics of 1902 and 1908 coincided with the advent of a great number of susceptible persons. (2) The disease had its incidence especially on those persons and during the 1908 epidemic, in its typical form. (3) Fatal cases occurred only among the susceptible persons. (4) Europeans and other whites, who had already sojourned for some years in the country, were immune from the disease or suffered from it in abortive form. (5) White persons who had been born in the country and then had been for a long time in a country free of the disease were found to have lost their relative immunity and might die of the disease. (6) A feverish sickness was observed before and after the epidemic of 1908 among persons recently arrived from Europe, which by exclusion is regarded as having been an abortive form of yellow fever. (7) Only the explanation of the existence of a *virus mitis* and maintenance of the disease in atypical form during non-epidemic periods suffices to explain why natives and whites who have lived long in a yellow fever land do not suffer severely during epidemics, but almost invariably from light abortive attacks.

Further proof of these contentions was obtained by applying tests for the presence of immune bodies in sera—protective tests in mice. Such immune bodies are to be found for 10 to 70 years after contraction of infection. This test could obviously only be valid for persons born in the country after 1908. It was carried out for example on 22 females and 18 males from Surinam and a considerable number showed a protective serum. The ages of the positively reacting individuals were: females 25, 23, 20, 18, 9 and 8; males 24, 22, 15, 13 and 11 years, respectively.

The so-called jungle yellow fever is very important for the occurrence of an endemic form of yellow fever. This type of the disease has been found existent close to primeval bush and where *Aëdes aegypti* mosquitoes are not met with. It affects men, who are the workers in the jungle, and not women, whereas the yellow fever contracted from the bite of *Aëdes aegypti* affects both sexes equally. None the less, the virus of jungle yellow fever is identical with the ordinary yellow fever virus. It would appear then that man is not the reservoir of the jungle virus. It is still to be determined whether jungle yellow fever occurs in Surinam.

If the economic condition of Surinam should improve and once more immigration of susceptible persons take place into the colony it will be the duty of the authorities to take heed of the possibility that a recrudescence of yellow fever in epidemic form may again take place.

W. F. Harvey.

Benarroch (E. I.). Yellow Fever in Venezuela in 1929.—*Amer. Jl. Trop. Med.* 1937. July. Vol. 17. No. 4. pp. 595–604.

[See this *Bulletin*, 1937, Vol. 34, p. 682.]

MATHIS (Maurice). Biologie comparée, en conditions expérimentales, de 13 souches du moustique de la fièvre jaune ; fécondations croisées. [**The Comparative Biology, under Experimental Conditions of 13 Strains of the Yellow Fever Mosquito ; Cross Fertilizations.**]—*C. R. Soc. Biol.* 1937. Vol. 125. No. 20. pp. 638–639.

A continuation of the author's experiments with various strains of *Aëdes aegypti* [see this *Bulletin*, 1935, Vol. 32, p. 292], showing that cross-fertilization can be effected between sources from the most widely different localities, such as Java, Athens, Batavia and Dakar. In all, 13 sources have been studied and found to be identical in their behaviour and to be mutually fertile, thus confirming the view that this is a very homogeneous species in all parts of the world, and consequently a serious potential danger as a carrier of yellow fever.

E. H.

ROUBAUD (Emile), COLAS-BELCOUR (Jacques) & STEFANOPOULO (Georges Jean). Transmission de la fièvre jaune par un moustique paléarctique répandu dans la région parisienne, l'*Aëdes geniculatus* Oliv. [**The Transmission of Yellow Fever by a Palaearctic Mosquito occurring in the Neighbourhood of Paris,** *Aëdes geniculatus* **Oliv.**]—*C. R. Acad. Sci.* 1937. July 12. Vol. 205. No. 2. pp. 182–183.

Aëdes geniculatus occurs widespread in Europe, breeding exclusively in holes in trees, and during summer readily feeds on human beings and animals.

Eight of these mosquitoes, newly emerged from larvae collected in Normandy, were allowed to gorge on a monkey infected with yellow fever and then fed on sugar and kept at 30°–35°C. for 14 days. They were then allowed to feed on a normal monkey which after the usual incubation period developed fever and died with typical symptoms of yellow fever. The remaining mosquitoes were ground up and inoculated intracerebrally into mice which also died of yellow fever encephalitis.

These results show that *A. geniculatus* is an efficient carrier of yellow fever virus. *E. H.*

BIZIEN & DESNOS. Sur un cas atypique de fièvre jaune. [**An Atypical Case of Yellow Fever.**]—*Rev. Méd. et Hyg. Trop.* 1937. May–June. Vol. 29. No. 3. pp. 151–164. With 3 charts.

An account of three cases occurring at Abidjean, Ivory Coast, during 1937, presenting symptoms of yellow fever. The first case (fatal) was that of a patient who had been inoculated with 3 doses of Laigret's vaccine approximately 19 months previously. The post-mortem findings together with the clinical history are discussed in detail, and suggest that the case was one of yellow fever with renal complications. The wife of this patient, who had been bitten by many mosquitoes in the same locality, developed a typical fatal attack of yellow fever shortly after the death of her husband.

A child of 12 years of age also became infected and showed typical symptoms, but recovered. The plantation where these cases occurred was found to contain several tons of receptacles, either empty or half full of water, and 484 breeding places were discovered, of which 267 contained larvae of *Aëdes*. *E. H.*

MATHIS (Maurice). Etude d'une souche de virus amaril isolée directement du sang de l'homme par inoculation intra-cérébrale à la souris blanche (avec remarques de M. C. MATHIS). [**The Study of a Strain of Yellow Fever Virus isolated Directly from Human Blood by Intracerebral Inoculation into White Mice (with Remarks by M. C. Mathis).**]—*Bull. Soc. Path. Exot.* 1937. July 7. Vol. 30. No. 7. pp. 525–532.

The main interest of this case from Senegal lies in the fact that none of the clinical symptoms of the patient, given *in extenso*, was characteristic of yellow fever. A monkey, *Macacus rhesus*, inoculated with blood collected on the second day of illness, died of yellow fever four days later, and six mice inoculated intracerebrally, each with 0·1 cc. of the same lot of serum, died of encephalitis after 10 to 17 days. This " Ricou strain " has been passed through mice for 40 passages and is a typical neurotropic strain of yellow fever.

In the discussion attention is drawn to the well-known fact that in patients infected with yellow fever all the characteristic symptoms may be absent, including jaundice, black vomit, and even albuminuria. The use of mice instead of monkeys for the experimental diagnosis of doubtful infections is of great practical convenience. *E. H.*

NICOLAU (S.), MATHIS (M.) & BAFFET (O.). Altérations histologiques et présence d'inclusions amariles dans l'encéphale de l'homme mort de fièvre jaune. [**Histological Changes and the Presence of Yellow Fever Inclusion Bodies in the Brain of a Man Dead of Yellow Fever.**]—*Bull. Soc. Path. Exot.* 1937. Oct. 13. Vol. 30. No. 8. pp. 615–618. With 2 figs.

The authors obtained the whole brain from a fatal case of yellow fever, and give an account of the histological changes based on the examination of sections from 17 different regions.

The meninges, as a rule, appeared normal, but there was a great proliferation of glial cells in the grey matter and also in the white substance, accumulating round the vessels to form more or less complete perivascular " cuffs." This may be accompanied by infiltration of mononuclears, and occasionally a nerve-cell may be surrounded by 4 to 8 of these mononuclear phagocytes.

The nerve cells in all parts of the brain show the characteristic intranuclear bodies, which seem to be more numerous than in the brains of monkeys dying of yellow fever. In addition the glial cells often show inclusions, especially in the cortex of the brain. *E. H.*

MONTENEGRO (João). Diagnostico anatomo-pathologico da febre amarella. [**Diagnostic Value of the Histological Changes in Yellow Fever.**]—Reprinted from *Archivos Hyg. e Saude Publica.* São Paulo. 1937. Vol. 3. pp. 109–119. With 3 coloured plates. [31 refs.] English summary.

This article is illustrated by coloured plates showing the changes in the liver occurring in jungle yellow fever. The liver is the only viscus dealt with in detail, but the author states that in four cases in which the kidney tissue was examined calcareous deposits were seen.

The paper is based on histological examination of 182 cases of suspected jungle yellow fever occurring in São Paulo in the period December 1935–February 1937. He compares the changes found in

yellow fever with those of infectious jaundice (Weil's disease) and typhus. Among the 182 were 105 regarded as positive, *i.e.* from cases of yellow fever. No differences could be detected between the lesions of the jungle (rural) type and the urban. The author regards the following changes as characteristic and their diagnostic importance in descending order of value: 1. The Councilman-Rocha Lima cell [*i.e.*, liver cells containing the "Councilman bodies"]; 2. The Rocha Lima type of zonal necrosis; 3. General disorganization of the liver parenchyma; 4. Fatty changes. He estimates the Torres nuclear inclusions as of high diagnostic value if present, but they are not seen in all cases. *H. H. S.*

NICOLAU (S.) & BAFFET (O.). Fièvre jaune inapparente révélée par la présence de lésions et d'inclusions dans le système nerveux des chiens inoculés avec le virus amaril. Insensibilité du chat à l'égard de l'action pathogène de ce même virus. [**Non-apparent Yellow Fever identified by the Presence of Lesions and Inclusion Bodies in the Nervous System of Dogs inoculated with Yellow Fever Virus. The Non-susceptibility of the Cat concerning the Pathogenic Action of this Virus.**]—*Bull. Soc. Path. Exot.* 1937. Oct. 13. Vol. 30. No. 8. pp. 611–615. With 2 figs.

Six two-months-old puppies were inoculated intracerebrally with yellow fever virus cultivated in the brains of guineapigs. None of the animals showed any signs of infection, but five were killed at intervals of 8, 9, 11, 14 and 19 days after inoculation and their brains examined. All were found to show parenchymatous lesions of encephalitis, and the nerve-cells contained the characteristic intra-nuclear bodies. Nevertheless, virus was not recovered from the central nervous system of these animals, intracerebral inoculations into mice being uniformly negative.

Four kittens similarly inoculated at the same time as the puppies not only showed no signs of infection, but also no trace of any lesions in the central nervous system, and would seem to be completely refractory to neurotropic yellow fever virus. *E. H.*

HOFFMANN (W. H.). **Some Experiences of Yellow Fever Endemicity in Africa and America.**—*Jl. Trop. Med. & Hyg.* 1937. July 1. Vol. 40. No. 13. 149–154.

General reminiscences in which the author mentions that since 1924 systematic histological examinations for yellow fever have been made on post-mortem material from West Africa and South America, resulting in the discovery of endemic infections in these two regions. For practical purposes the histological method of diagnosis is advocated as the most reliable and quickest way to make the early diagnosis of yellow fever, especially of early epidemic cases in countries with a latent endemic infection. *E. H.*

FINDLAY (G. M.) & MACCALLUM (F. O.). **Note on Acute Hepatitis and Yellow Fever Immunization.**—*Trans. Roy. Soc. Trop. Med. & Hyg.* 1937. Nov. 30. Vol. 31. No. 3. pp. 297–308. [31 refs.]

During the past four and a half years approximately 2,200 persons have been immunized against yellow fever, and careful records kept

of the immediate results of inoculation and any remote illnesses. In all, 52 cases of jaundice have been traced, 4 of which were probably due to food poisoning. The remaining 48 cases developed symptoms of hepatitis and jaundice two to seven months after inoculation. The symptoms observed have been very similar to those of common infective hepatic jaundice and there is good evidence showing that it was not directly due to the yellow fever virus. In two instances the hepatitis developed four weeks after exposure to infection with common infective hepatic jaundice.

In discussing possible explanations of these occurrences, it was at first thought they were purely fortuitous, but the fact that over a period of four years between 2 per cent. and 3 per cent. of those inoculated have developed jaundice suggests a positive correlation. There is little evidence that the jaundice is a coincidence, or directly caused by the yellow fever virus, but it is conceivable that some extraneous agent may be injected, together with the vaccine. It is possible that the human serum used for suspending the chicken-grown yellow fever virus may contain the hypothetical virus of common infective hepatic jaundice (whose inoculation period is normally a month or so), and therefore now all serum used in growing the yellow fever virus or in making the vaccine is being inactivated before use. If this results in a cessation of these cases, the evidence in favour of this hypothesis would be much strengthened.

Finally, it is possible that the inoculations of yellow fever virus or other foreign proteins may occasionally reduce the resistance of the liver to the agent of infective hepatic jaundice or to other hepatotoxic substances. A somewhat similar case is presented by the occurrence of acute liver necrosis of horses known as "staggers," in South Africa, which seems to come on mostly 62 to 78 days after inoculation against horse sickness. Moreover "staggers" is found to a higher degree in inoculated horses than in non-immunized controls.

E. H.

SOPER (Fred L.). **Present Day Methods for the Study and Control of Yellow Fever.**—*Amer. Jl. Trop. Med.* 1937. Sept. Vol. 17. No. 5. pp. 655–676. With 10 figs.

A good general account of the problem with special reference to the use of the mouse protection test and viscerotomy for discovering the past extent and present occurrence of both *aegypti*-transmitted and jungle yellow fever. Further studies are necessary in order to develop methods of control for the latter, other than vaccination. In the case of ordinary yellow fever, however, anti-*aegypti* measures are imperative for the protection of cities and towns in endemic and possibly epidemic regions. In this connexion it is pointed out that the use of a cycle of inspection greater than seven days is justified only after *Aëdes aegypti* has been brought almost to extinction; otherwise the use of longer cycles must lead to disappointing results. *E. H.*

PLUMBER & JOURNAL OF HEATING. 1937. Nov. 1. Vol. 59. No. 706. p. 351. With 1 diagram.—**Hughes' Anti-Mosquito Siphonic Cistern.**

Approaching one phase of the problem of mosquito control from the point of view of the sanitary engineer, Mr. J. Hughes of Moss Side,

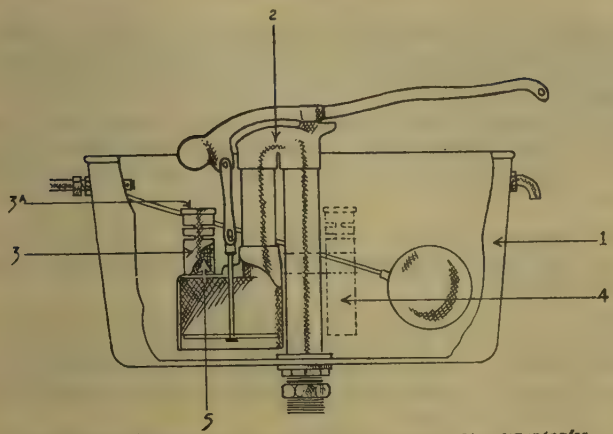

THE "HUGHES" ANTI-MOSQUITO SYPHONIC CISTERN • PROV. PAT. 13607/37

1. Cistern case. 2. Siphon. 3. Short brass tube fixed on top of the siphon basin, with a slip-on top (3A). 4. Long 1⅜-in. brass tube attached to the long leg of the siphon. 5. Cotton absorbent material enclosed in open-mesh sack.
[Reproduced from the *Plumber and Journal of Heating*.]

Manchester (who has had considerable experience East of Suez), has invented "a mosquito-proof water closet flushing cistern," of which the accompanying diagram is given. He advocates this as an effectual additional means of coping with the menace of *Aëdes aegypti* in yellow fever areas and aerodromes.

"The cistern is made mosquito-proof by the old method of oiling the surface of the water, but the mode of distribution is as unfailing as it is new. That is, by filling either 3 or 4 with material thoroughly soaked in oil, then pouring in sufficient specially prepared anti-mosquito oil as to fill the tube, allowing a little to overflow in the case of newly installed cisterns. The oil tubes are horizontally slotted just below the water line, and the rising water with its swirling action, comes in contact with the saturated oiled pad; at the same time, the specific gravity of the water causes it to sink to the bottom of the tube, thus displacing a small amount of oil, and at the same time having the effect of compressing the oil in a denser mass upwards through the pad."

It is possible for only a small amount of the thinly spread surface oil to leave the cistern by way of the flush pipe at each flush, this is replenished from the reservoir.

The patented device can be attached to any cistern, as shown by dotted lines No. 4 in the diagram, but the inventor advocates the installation of the complete cistern to ensure a full measure of success.

A working model of the cistern has been presented to the Ross Institute and placed in the public health practical room of the London School of Hygiene and Tropical Medicine. *Henry H. Clay.*

PEER (Josef). Gelbfieberprophylaxe durch Mückenbekämpfung an Bord D.S. "Orion." [**Yellow Fever Prophylaxis through Anti-Mosquito Measures on Board S.S. "Orion."**]—*Arch. f. Schiffs- u. Trop.-Hyg.* 1937. June. Vol. 41. No. 6. pp. 463–464.

A note on the author's experiences when visiting various Brazilian ports on board an Austrian Lloyd ship during 1901. At that time

yellow fever was so prevalent in South America that a voyage to Brazil was regarded as a veritable death cruise, since approximately 50 per cent. of the personnel of these ships used to succumb to the disease.

By the adoption of anti-mosquito measures on board, the "Orion" visited various infected ports, including a 14 days stay at Santos, without any cases of yellow fever occurring among the crew. *E. H.*

PUBLIC HEALTH REPORTS. 1937. July 30. Vol. 52. No. 31. pp. 1027–1030.—**Preventing the Spread of Yellow Fever through Air Traffic.**

With a view of taking steps to prevent the international spread of yellow fever by air traffic, an arrangement has been entered between the Pan-American Sanitary Bureau and the Pan-American Airway System, which will be extended to other international airplane services in the Western Hemisphere.

Each passenger is required to carry the following certificate:—

Pan-American Sanitary Bureau.

Issuing agency.....
Place .....
Date issued.....

CERTIFICATE OF ORIGIN OF PASSENGER.
(To be filled in by agency issuing airplane passage.)

NOTE: This certificate is a personal one and should be retained by the passenger along with vaccination and health certificates.

Name of passenger.....
Where does voyage begin ?..... Date .....
Where does voyage end ?..... Date .....
Will voyage be direct, or will there be stopovers ? .....

Places of stopover	Date of arrival	Date of departure
.....	.....	.....
.....	.....	.....
.....	.....	.....

Where does passenger reside when at home ?.....
On what date did passenger arrive in city where he will embark ?.....
Give localities visited or resided in for 6 days prior to embarkation:

1st day..... 4th day.....
2nd day..... 5th day.....
3rd day..... 6th day.....

REMARKS: Persons who can present satisfactory evidence that they have had yellow fever, or who can present certificates of vaccination against yellow fever, will not need Certificate of Origin.

This form will not be required of international passengers originating south of 30° south latitude unless they make stopovers in the area north of this parallel in excess of 1 day while *en route* to their destination.

E.H.

WHITMAN (Loring). **The Multiplication of the Virus of Yellow Fever in** *Aëdes aegypti.—Jl. Experim. Med.* 1937. Aug 1. Vol. 66. No. 2. pp. 133–143.

The author fed various lots of *Aëdes aegypti* on monkeys infected with the Asibi strain of yellow fever virus, and using mice, titrated the amount of virus present in the mosquitoes after various intervals

following their infection. Although variations of unexplained origin occurred, the results clearly show that, following the ingestion of infected blood, the virus content falls for some days, reaching a minimum during the first week. It then increases rapidly until quantities of virus greater than those previously encountered can be demonstrated, but the actual final amount of virus is subject to considerable variation.

The results of a typical experiment are shown in the following table :—

Titres of virus in Aëdes aegypti *at various intervals after infection.*

Time after feeding : Days	Titres obtained with two lots of 30 mosquitoes each	Average titre
0	22,000 146,500	84,250
3	900 360	630
10	16,000 3,500	9,750
24	24,800 24,800	24,800
38	1,275,000 160,000	717,500

These results agree with the opinion of SELLARDS [see this *Bulletin*, 1935, Vol. 32, p. 592] that such multiplication occurred and are opposed to the conclusions arrived at by DAVIS, FROBISHER and LLOYD [see this *Bulletin*, 1934, Vol. 31, p. 81]. *E. H.*

SELLARDS (Andrew Watson) & BENNETT (Byron L.). **Vaccination in Yellow Fever with Non-Infective Virus.**—*Ann. Trop. Med. & Parasit.* 1937. Oct. 22. Vol. 31. No. 3. pp. 373–378.

Using the French neurotropic strain of yellow fever virus at varying intervals from the 271st to the 350th passage in mice, the authors have prepared 20 per cent. suspensions of the infected mouse brains in physiological saline containing 1 per cent. phenol. The suspension was kept for 6 days at 37°C., when it was found to have lost its virulence completely, and then stored at 4°C.

Thirty-five mice inoculated with repeated doses of this vaccine were subsequently tested for immunity. Twenty-one of these animals survived, whilst out of 31 controls only 2 survived. The vaccine was also injected into 2 rabbits which developed somewhat transitory protective bodies in their sera. A vaccine was also prepared by adding cysteine to the above mentioned phenol suspension. This substance was found to increase the efficiency of the vaccine, probably by restoring some of the lost antigenic activity.

Finally the author discusses the technical difficulties of immunization with killed viruses. *E. H.*

ROUBAUD (E.), STEFANOPOULO (G. J.) & FINDLAY (G. M.). Essais de transmission par les stegomyies du virus amaril de cultures en tissu embryonnaire. [**Attempts to transmit Yellow Fever Virus in Embryonic Tissue Cultures by Means of Mosquitoes** (*Aëdes*).]—*Bull. Soc. Path. Exot.* 1937. July 7. Vol. 30. No. 7. pp. 581–583.

The authors fed various lots of *Aëdes aegypti*, originally from Cuba, Assam and Tanganyika, respectively, on monkeys inoculated with culture virus that had been kept for long periods either in mouse embryo tissue and then fowl embryo tissue, or in the latter alone. In every case virus was present in the circulating blood of the inoculated monkey, yet none of the mosquitoes which fed on these animals became infective, as tested by keeping the insects at 28° to 30°C. for 7 to 37 days and allowing them to feed on normal monkeys. It would seem, therefore, that this culture strain of virus is not transmissible by the bites of mosquitoes. *E. H.*

FINDLAY (G. M.) & MACCALLUM (F. O.). **Yellow Fever Immune Bodies in the Blood of African Primates.**—*Trans. Roy. Soc. Trop. Med. & Hyg.* 1937. June 25. Vol. 31. No. 1. pp. 103–106.

An examination by the mouse protection test of the sera of 67 wild African monkeys, all from areas where immune bodies have been found

Yellow Fever Immune Bodies in the Sera of African Monkeys.

Locality	Species	Number of sera examined	Number of sera protecting	Number of sera not protecting
Anglo-Egyptian Sudan.	*Galago senegalensis senegalensis* Elliot.	3	0	3
	Erythrocebus patas Elliot	1	0	1
	Cercopithecus aethiops centralis Neumann.	15	1	14
Sierra Leone ...	*Colobus vellerosus* Elliot (=*polykomos*; Schwarz).	1	1	0
Liberia ...	*Cercopithecus* sp.	10	4	6
Gold Coast ...	*Cercopithecus* sp.	1	0	1
	C. diana diana	1	1	0
	Erythrocebus patas Elliot...	1	0	1
	Colobus vellerosus Elliot (=*polykomos* Schwarz).	5	3	2
	Procolobus badius badius Pocock, 1935.	6	3	3
	P. badius waldroni Hayman.	3	1	2
Uganda ...	*Cercopithecus aethiops centralis* Neumann.	20	5	15
	Total	67	19	48

in the blood of human beings, showed the presence of yellow fever immune bodies in 19 individuals belonging to 7 different species, as indicated in the table above.

If these results are combined with those previously recorded, out of a total of 92 African monkeys, 22, or approximately 23 per cent., have shown yellow fever immune bodies. In view of the essentially domestic character of *Aëdes aegypti* it would seem probable that under natural conditions other mosquitoes must be regarded as potential vectors of yellow fever. *E. H.*

MacCallum (F. O.) & Findlay (G. M.). **Yellow Fever Immune Bodies and Animal Sera.**—*Trans. Roy. Soc. Trop. Med. & Hyg.* 1937. July 31. Vol. 31. No. 2. pp. 199–206.

Employing the usual mouse protection test the authors have examined the sera of various wild animals and also of cows and sheep for the presence of protective antibodies against yellow fever virus. The following wild animals from Sierra Leone and the Gold Coast were examined with uniformly negative results :—Bush rat, *Mastomys erythroleucus* (9) ; field rat, *Arvicanthis occidentalis* (1) ; ground pig *Cricetomys gambianus* (2) ; and antelopes (3).

The results with cattle sera from various localities have been given above [see p. 111].

The results of the examination of cattle sera from Kenya are of especial interest, as the possibility of their having been exposed to infection cannot be entirely excluded. Out of 175 sera from areas where yellow fever is not known to be present in man 13 sera (7 per cent.) were finally positive and of these 13 sera 11 came from an area in Kenya near the Uganda border. Out of 70 sheep sera from Kenya 3 protected. Two from Uganda were negative.

A two-months-old calf injected subcutaneously with the Asibi strain of yellow fever virus showed no febrile reaction, but virus was present in the circulation after four days though not after six days. A second injection three weeks later failed to produce any febrile reaction, but the serum examined three weeks later protected in a dilution of 1 : 16.

It seems impossible to interpret these results in the present state of our knowledge, for in Uganda where the percentage of positive human sera is small, the percentage of cow sera protecting is large, whilst in the Gold Coast where there is a much higher proportion of positive human sera, the cattle sera were all negative. It would seem probable that virucidal properties may appear in cattle under certain physiological conditions, or as the result of bacterial or virus infections other than yellow fever. *E. H.*

Woke (P. A.). **Comparative Effects of the Blood of Different Species of Vertebrates on Egg-Production of** *Aëdes aegypti* **Linn.**—*Amer. Jl. Trop. Med.* 1937. Sept. Vol. 17. No. 5. pp. 729–745.

Batches of *Aëdes aegypti*, comprising from 23 to 28 individuals in each lot, were fed on the blood of various species of animals in order to determine whether there were any significant differences in the number of eggs laid. By weighing the mosquitoes before and after

each blood-meal, the average number of eggs per mgm. of blood was estimated in the following seven species :—

Average Number of Eggs per mgm. of Nutrient.

Animal	After 1st blood meal	After 2nd blood meal	Average for both blood meals
Man	34·0	24·0	29·3
Monkey ...	31·5	24·8	28·2
Rabbit	53·2	44·1	48·9
Guineapig ...	55·3	49·2	52·4
Canary ...	48·8	35·6	42·4
Turtle	50·2	41·9	46·3
Frog	58·2	47·0	52·6

It will be seen that significantly greater numbers of eggs are produced on the blood of the turtle, frog, canary, rabbit and guineapig, than on human or monkey blood. *E. H.*

RELAPSING FEVER AND OTHER SPIROCHAETOSES.

ANDERSON (Charles) & SICART (Marcel). Nouveaux cas de fièvre récurrente hispano-africaine observés dans un même foyer du nord de la régence. Etude des virus isolés. [**New Cases of Spanish-Moroccan Relapsing Fever observed from the Same Centre in the North of the Regency. Study of the Strains isolated.**]—*Arch. Inst. Pasteur de Tunis.* 1937. June. Vol. 26. No. 2. pp. 250–256.

During 1935 and, after a year's interval, in 1936, several cases of relapsing fever occurred in a small mud hut at Furna in the north of Tunisia. The patients showed similar symptoms, the most striking being the sudden onset and especially articular and muscular pains. Treatment with arsenicals (914, acetylarsan, sulpharsenol) gave no appreciable results, but Guiart's pills were found to shorten the convalescent period.

Guineapigs were infected from one of the 1935 and one of the 1936 cases, and from a study of its cross-immunity reactions, the spirochaete found to be typical *S. hispanica*. Transmission experiments were made with various carriers. *O. erraticus* was found to produce the infection, both by bite and also by the inoculation of its contents. *Pediculus humanus* fed on infected blood, produced infection in guineapigs by inoculation of the emulsified lice, but feeding experiments could not be carried out owing to the absence of monkeys.

Xenopsylla cheopis was also shown to be a natural carrier of the infection, for a normal rat separated from an infected one by a double wall of wire netting, acquired the infection when these fleas were placed in the cage.

A single attempt at transmission by *Rhipicephalus sanguineus* gave negative results. *E. Hindle.*

JAHNEL (F.). Ueber das Ueberleben von Syphilis- und Recurrensspirochäten sowie Sodokuspirillen in flüssigem Stickstoff (Temperatur —196°) und die Einwirkung anderer Kältegrade auf diese Mikroorganismen. [**The Survival of Syphilis and Relapsing Fever Spirochaetes, and also Sodoku Spirilla in Liquid Nitrogen (Temperature —196°C.) and the Influence of Other Degrees of Cold on these Micro-organisms.**]—*Klin. Woch.* 1937. Sept. 18. Vol. 16. No. 38. pp. 1304–1305.

The author confirms previous observations on the survival of various trypanosomes and spirochaetes after being frozen, and finds that in the case of relapsing fever spirochaetes, also *Spirochaeta pallida* and *Spirillum minus*, these organisms survive at a temperature of —196°C. for at least 14 days.

[The reviewer previously recorded the survival of *S. pallida* and other spirochaetes at temperatures of —10°C even when dried *in vacuo*. (See this *Bulletin*, 1934, Vol. 31, p. 512)]. *E. H.*

KIEN-HUN (Bau). Interferenzversuche bei Spirochäteninfektionen (Mäuserekurrens und Kaninchensyphilis). [**Interference Studies on Spirochaetal Infections. (Mouse Relapsing Fever and Rabbit Syphilis.)**]—*Ztschr. f. Immunitätsf. u. Experim. Therap.* 1937. July 8. Vol. 90. No. 5/6. pp. 482–493. [19 refs.]

The author has studied the interference effect of brilliant green on the spirochaeticidal action of Solganal in mice infected with various

strains of relapsing fever. The brilliant green was generally administered subcutaneously followed four hours later by an intravenous injection of Solganal.

In the case of mice infected with a European strain of *S. recurrentis*, the administration of brilliant green produced complete interference of the spirochaeticidal action of Solganal, although it did not diminish its toxic properties. On the other hand, in the case of mice infected with *S. novyi* and *S. hispanica*, no interference phenomena were observed, and the Solganal was equally effective in mice that had been previously treated with brilliant green and in untreated controls. This dye also produced a slight diminution of the effectivity of Solganal in mice infected with the *crocidurae* strain of *S. duttoni*.

In the case of rabbits infected with "Truffi" and "Nichols" strains of *S. pallida*, treatment with brilliant green was found to diminish the curative action of Solganal very markedly. In this case the dye was administered not only four hours before the Solganal, but also in addition three or five days later.

Tests were made with numerous dyes known to produce interference phenomena against trypanocidal agents in mice infected with trypanosomes, but in no case was any substance found which in any way diminished the curative action of neosalvarsan in mice infected with relapsing fever. *E. H.*

PAI (S. E.). **Wassermann and Kahn Reactions in Relapsing Fever.**—*Chinese Med. Jl.* 1937. Oct. Vol. 52. No. 4. pp. 595–598.

An examination of 13 non-luetic cases of infection with a Chinese strain of *Spirochaeta recurrentis* in order to determine whether positive Wassermann or Kahn reactions occur in this disease. Five cases gave positive Wassermann reactions during the febrile stage and one during the afebrile period between relapses. The Kahn tests with this series were all negative, except one which gave a strong reaction and another a weak reaction. Four untreated and three treated cases gave negative reactions with both tests; also three of the positive cases re-examined after a single dose of specific injection were also negative.

E. H.

RAT-BITE FEVER.

JAHNEL (F.). Ueber den Einfluss des Winterschlafes auf die Sodokuinfektion. [**The Influence of Hibernation on Sodoku Infection.**]—*Ztschr. f. Immunitätsf. u. Experim. Therap.* 1937. Oct. 15. Vol. 91. No. 4. pp. 318–323. [14 refs.]

Dormice were infected with the Elberfeld strain of *Spirillum minus* and when the infection was well developed, the animals placed in a cold room to induce hibernation. In all cases it was found that the infection died out very quickly during hibernation. Inoculations of the blood, brain and internal organs were made from infected dormice, after varying intervals from the beginning of hibernation, and in one instance, even after 24 hours the infection was found to have died out. These results agree with previous observations on the effect of hibernation on infections with *Spirochaeta pallida* or trypanosomes.

There is no obvious explanation of this curative effect of low temperatures, for *S. minus* will withstand −196°C. for at least 14 days. It is possible that the lower temperature of hibernating animals, by inhibiting the multiplication of the parasites, may enable the natural defence mechanism of the organism to effect a cure. *E. Hindle.*

LEPTOSPIROSIS.

Das Gupta (B. M.) & Chopra (R. N.). **The Occurrence of Weil's Disease in India.**—*Indian Med. Gaz.* 1937. Oct. Vol. 72. No. 10. pp. 610–612. [10 refs.]

The record of a case of Weil's disease in a Calcutta patient. The causative organism was recovered from the blood (culture) and urine, but attempts to infect guineapigs were unsuccessful. Although the disease has been previously recorded in India on clinical grounds, this seems to be the first time that leptospirae have been recovered from a case. *E. Hindle.*

Beiglböck (W.). Ueber die Leptospirosen Menschen, insbesondere den Morbus Weil. [**Human Leptospiroses, especially Weil's Disease.**]—*Wien. Klin. Woch.* 1937. July 23. Vol. 50. No. 29. pp. 1088–1093. [50 refs.]

A general review of the subject. *E. H.*

Vaucel (M.). Essai d'identification d'un leptospire isolé à Hanoi au cours d'une affection humaine ictérigène. Spécificité de " type." [**An Attempt to identify a Leptospira isolated in Hanoï during the Course of an Attack of Human Jaundice. Specificity of the Type.**]—*Bull. Soc. Méd.-Chirurg. Indochine.* 1937. Apr. Vol. 15. No. 4. pp. 385–392. With 2 charts.

Details of laboratory tests with a strain of leptospira isolated from a fatal case of Weil's disease in a European at Hanoï [see this *Bulletin*, 1937, Vol. 34. p. 708].

This strain, named *Leptospira K*, in its pathogenic properties and agglutination reactions was found to be very distinct from the strains of *L. icterohaemorrhagiae* kept at Hanoï. It resembled *L. hebdomadis* in its low virulence, but was serologically distinct. Agglutination reactions suggest that it is most closely related to *L. autumnalis*, but possesses a higher pathogenicity.

Agglutination tests were made with 100 samples of sera collected at Hanoï, using various strains of leptospira. Forty-three of these were positive. Three agglutinated *Leptospira K* exclusively up to 1/1,000; 1 agglutinated *Leptospira K* up to 1/15,000, *L. autumnalis* to 1/2,000 and *L. icterohaemorrhagiae* to 1/1,000; 1 reacted with *L.K.* up to 1/10,000, and with *L. autumnalis* 1/5,000 and *L. icterohaemorrhagiae* to 1/1,000. Out of 31 cases agglutinating *L. icterohaemorrhagiae*, 12 contained co-agglutinins for *Leptospira K* up to 1/1,000, but of 7 agglutinating *L. autumnalis*, two had the same titre for *L.K.*, and four other cases contained co-agglutinins against this strain. *E. H.*

DAHR (Peter). Ueber das vorkommen von Antikörpern gegen *Spirochaeta icterogenes* und *Sp. canicola* bei Hunden. [**The Prevalence of Antibodies against** *Spirochaeta icterogenes* **and** *S. canicola* **in Dogs.**]—*Klin. Woch.* 1937. Oct. 23. Vol. 16. No. 43. pp. 1491–1492. [15 refs.]

The author gives the results of agglutination and lysis tests of the blood of 200 dogs, including 14 different breeds, in Cologne, showing the prevalence of infection with *Spirochaeta* (*Leptospira*) *icterohaemorrhagiae* and *S. canicola.* Only 10 sera were positive and of these 6 reacted with both strains of spirochaete ; 1 serum reacted only with the Weil type, and 3 only with the *canicola* type. The titre of the immune serum reached a strength of 350 in two of these *canicola* infections, but in most cases did not exceed 50. It would seem, therefore, that in this district the infection is not very severe in dogs and also rather uncommon. *E. H.*

MISCELLANEOUS.

TATE (P.). **A Method of labelling and protecting Blood Films.**—*Trans. Roy. Soc. Trop. Med. & Hyg.* 1937. June 25. Vol. 31. No. 1. p. 118.

In cases where there is an objection to "labelling" a blood film by scratching the record at one end the following is recommended. The necessary information is written on the label with Indian ink and the ungummed label fixed to the slide with cellulose lacquer and when dry the whole is covered with a thick coating of Durofix or other cellulose preparation. Immersion oil and xylol do not injure the labels of slides so treated, nor is the definition of blood cells or organisms interfered with for microscopic examination. Slides stained by Giemsa's or Leishman's method have faded no more than uncoated films, even after being kept for more than a year. [See also this *Bulletin*, 1936, Vol. 33, p. 227.] *H. H. S.*

ROSENTHAL (David B.). **The Influence of External Temperature on the Blood Sedimentation Rate.**—*Med. Jl. Australia.* 1937. Jan. 30. 24th Year. Vol. 1. No. 5. pp. 172–178. With 1 fig. & 7 charts. [13 refs.]

During an investigation of certain physico-chemical factors in the blood sedimentation rate the author confirmed the view of GORDON and CONH, WALTON and others that the temperature at which the test was conducted markedly influenced the result. This change in sedimentation rate was regarded as dependent, in part at least, on the changes in the viscosity of the blood plasma. Cutler's technique was used for measuring the sedimentation rate, the important points being (1) the shape of the curve, (2) the sedimentation index, *i.e.* the height of the column of clear plasma at the end of one hour, and (3) the sedimentation time, which was defined by Cutler as "the number of minutes that elapse before the period of packing of the red blood cells sets in." In the various experiments the tubes were floated in conical flasks containing water at the temperature chosen: 40°F., 60°F., 80°F., and 100°F. The tubes were passed through and supported on broad cork floats and 1 cc. of citrated blood was poured into each tube, measurements being made every five minutes on Cutler's graph paper. In all sedimentation curves three phases were recognized. First a "slow" phase usually of short duration; secondly a phase in which the velocity of fall has reached its maximum and is regular; thirdly a phase of "slowing" which goes on till fall ceases (packing). The lengths of the second and third phase are in inverse ratio to one another, and depend on the summation of the effects due to the height of the column and the cell volume for the particular specimen.

The results of various experiments showed that within certain limits the higher the temperature the more rapid the fall, and that the change in rate was roughly proportioned to the change in temperature. Temperatures equal to or exceeding 110°F. (43·3°C.) gave very irregular results owing to chemical changes in two phases of the suspension. Since laboratory work is done at variable temperatures at different seasons and in different parts of the world, it is important that some thermometric standardizations of the test be adopted.

Thus a sedimentation index of 17 mm. on a summer's day may well be the equivalent of 5 mm. in an identical specimen on a winter morning, whilst a " diagonal curve " on a hot day may have the same significance as a " horizontal line " during a cold spell.

Rosenthal concludes, not without good reason, that in the absence of any thermometric standard comparison of tests performed at different times on blood from the same source provides no reliable information, and he suggests that the room temperature and cell volume should both be recorded along with the " sedimentation index."

N. Hamilton Fairley.

SHIELS (D. O.). **Comparison of Punctate Basophilia and Ratio of Large to Small Lymphocytes in the Diagnosis and Prevention of Lead Poisoning.**—*Med. Jl. Australia.* 1937. Apr. 10. 24th Year. Vol. 1. No. 15. pp. 535–545. With 1 fig. [17 refs.] [Summary appears also in *Bulletin of Hygiene.*]

In a previous paper [see *Bull. of Hyg.*, 1936, Vol. 11, p. 817], the author recorded that in lead poisoning the ratio of large lymphoid cells to small lymphocytes was more closely related to the clinical condition than was the punctate basophilic or stippled cell count.

In the present paper a detailed comparison of these two factors in relationship to the clinical condition and the concentration of lead in the urine is made. It is pointed out that much of the discrepancy in the results of different investigations as to the absence, presence or extent of stippling of red cells is due to differences in technique and the time elapsing between the last exposure to a lead hazard and collecting the blood sample. Seller's alkaline methylene blue stain was used, but Giemsa and Jenner-Giemsa methods are stated to give substantially the same counts. From a clinical viewpoint cases were divided into three classes. Class A included those exhibiting the more severe clinical manifestations, Class B those with milder clinical features and Class C symptom-free patients who reported for tests merely as a precautionary measure.

The general conclusion reached was that when a person was investigated while still at work in a lead hazard, or within a few days of possible exposure, lead poisoning with disability might be expected where (*a*) the total stippled red cells per million equals 2,500 per cmm. ; (*b*) the coarsely stippled red cells per million equal 1,000 per cmm. ; (*c*) the ratio of large to small lymphoid cells is less than 1·5 ; (*d*) the concentration of lead in the urine equals or exceeds 1·5 mg. per litre ; (*e*) the coarsely stippled cell count divided by the ratio of large to small lymphocytes equals 800.

The inadvisability of adjudging the severity of cases exclusively by laboratory standards is emphasized.

N. Hamilton Fairley.

KATSUNUMA (Seizo). Anämie (Japan), klinische Seite.—*Nagoya Jl. Med. Sci.* 1937. June. Vol. 11. No. 1–2. pp. 19–77. With 5 charts & 1 map.

PAWAN (J. L.). A Case of Sickle-Cell Anaemia in Trinidad.—*Ann. Trop. Med. & Parasit.* 1937. July 13. Vol. 31. No. 2. pp. 271–274.

BING (Jens). **The Formolgel Reaction and Other Globulin Reactions.**—*Acta Med. Scandinavica.* 1937. Vol. 91. No. 3. pp. 336–356. [154 refs.]

The author, working in Denmark, has applied the formolgel reaction to a large number (3,697) of sera which were sent to the laboratory for diagnostic purposes. As an indication of a condition of hyperglobulinaemia the test is a very good one. Of the sera examined less than 1 per cent. gave a positive reading in half an hour, and about 2 per cent. in three hours. The positive cases were 14 cases of myeloma, some cases of sepsis and specific infections, cirrhosis of the liver, lymphatic leukaemia and purpura albuminalis. The formolgel reaction in these cases is compared with the sedimentation rate while other similar tests are briefly discussed. *C. M. Wenyon.*

PAVLOVSKY (E. N.) (Edited by). Le paludisme et les autres problèmes de parasitologie du Tadjikistan Méridional. [**Malaria and Other Problems in Tadjikistan (Bokhara).**]—Trav. Filiale Tadjikistan, Acad. Sci. U.R.S.S. Vol. VI (Zool. & Parasitol.). 1936. Moscow-Leningrad. [In Russian, with foreign summaries.]

This publication deals with the results of the 1933–34 Parasitological Expedition to Tadjikistan (former Bokhara) organized by the Academy of Sciences of U.S.S.R. under the leadership of Prof. E. N. Pavlovsky. The object of this and similar expeditions conducted since 1928, was to survey the incidence, distribution and bionomics of various parasites and vectors of man and animals from the point of view of their bearing upon the epidemiology of the prevalent local diseases and public health in general. E. N. PAWLOWSKY ("Neue Angaben über den Zecken des Recurrens und seine Uebertrager in Tadjikistan," pp. 13–43) found *Ornithodorus papillipes* infected with spirochaetes in the burrows of porcupines and in caves inhabited by bats, thus establishing the presence of foci of tick-fever independent of human habitations. Strains isolated from all these sources proved to be pathogenic to man, and to retain their virulence for five years. The author was able to confirm his previous contention that *O. papillipes* is the only vector of tick-fever in Middle Asia. V. S. GAMOV ("La fièvre à tiques récurrente au Darvas," pp. 45–52) records an endemic focus of tick-fever in Darvas. Papers by P. PETRISTSCHEVA and S. GREBELSKIJ (p. 63), P. D. BAŽHUTIN and E. P. LUPPOVA (p. 75), and by K. G. NAOUMOV (p. 107), deal with the epidemiology of malaria in the Baumanabad, Parchar and Hissar districts respectively. P. A. PETRISTSCHEVA and S. GREBELSKIJ (pp. 125–142) describe the results of experiments upon the resistance of the aquatic stages of Anophelines to desiccation, conducted under natural conditions in the rice-fields. The data obtained were applied in a large scale experiment on the control of the irrigation of rice-fields as an anti-mosquito measure. This is described in a further paper by P. A. PETRISTSCHEVA ("Intermittierende Bewässerung der Reisfelder, als Massregel gegen Malaria im südlichen Tadjikistan," pp. 143–170). By judiciously employing the method of interrupted irrigation (alternation of drying and flooding) over an area of 250 hectares of rice-fields a number of adjacent villages were entirely freed of mosquitoes with the resulting diminution in the incidence of malaria. Two papers (PETRISTSCHEVA, p. 171; NAOUMOV, p. 183) deal with the culicine fauna, and two others

(PETRISTSCHEVA, p. 195 ; P. and BREGETOVA, p. 211) with the sandfly fauna of various districts. G. ZMEEV (" Les insectes synantropes comme hôtes intermédiaires et hôtes vecteurs des helminthes au Tadjikistan," pp. 241–248) records the finding of helminth eggs in various insects associated with man. In another contribution (" Le bothriocephale au Tadjikistan," pp. 267–274) the same author discusses the identity of the *Diphyllobothrium* found in Tadjikistan dogs and jackals, and concludes that they represent *D. ranarum*. The remaining two papers are of purely zoological character.

C. A. Hoare.

[**Parasitological Symposium of Uzbekistan.**] Publ. by Inst. of Epidemiol. & Microbiol. and Tropical Inst., Tashkent. Vol. I. 1936. 496 pp. [In Russian.]

This volume contains collected papers on parasitological subjects connected with tropical medicine, by members of the staffs of the Institute of Epidemiology and of the Tropical Institute of Tashkent, and of various research laboratories in Uzbekistan (Middle Asia, U.S.S.R.). The following papers are mainly of local interest and can be referred to by title only, for bibliographical purposes: M. P. MEVZOS, " Epidemiological observations on malaria and anti-malaria measures in Uzbekistan in 1935 " (p. 6) ; M. E. TIMOFEJEVA, " The fight against malaria in the Middle Asia textile combine of Tashkent, in 1935 " (p. 26) ; V. TELTSOV, " Experiment on dusting from aeroplanes in the steppes, 1932–35 " (p. 40) ; MAGNITSKY, " Observations on the zooprophylaxis of malaria in Middle Asia " (p. 67) ; I. V. GUSEV, " Fauna of culicid mosquitoes at various points of the Middle Asia railway " (p. 85) ; N. I. KHODUKIN and E. J. STERNHOLD, " Zoophilism and anthropophilism in certain *Anopheles* of Middle Asia " (p. 85) ; P. P. CHINAJEV, " Key to the larvae of the *Anopheles* of Uzbekistan in all stages of development, determined by the hairs of the head " (p. 139), " The differentiation of the larvae of *An. algeriensis* and *An. bifurcatus* by the structure of the stigmal plate " (p. 144) ; A. I. LISOVA, " Variation in the eggs of *Anopheles superpictus* " (p. 146), " Materials on the biology of *A. superpictus* " (p. 153), " Variation of the eggs of *A. superpictus* in the light of racial studies " ; O. SOLODOVNIKOVA " The physiological state of female *An. maculipennis* var. *sacharovi* and *An. superpictus* in the aestivo-autumnal period " (p. 161) ; A. V. ULITCHEVA, " On the biology of *A. superpictus* in the river Agalyksai " (p. 170) ; M. T. BALASHEVA, " On the development of Uzbekistan sandflies under laboratory conditions " (p. 202) ; A. I. SCHURENKOVA, " A simple technique for experimental breeding of sandflies " (p. 212) ; N. I. LATYSHEV, " An outbreak of unknown infection in Stalinabad in 1935 " (p. 248) ; M. V. OSTROUMOVA, " On the biology of ticks of the genus *Ornithodorus*. The functional state of the sexual organs and the development of ova " (p. 270) ; E. I. SCHLEICHER, " Qualitative and quantitative analysis of the helminths from the large intestine of sheep in Middle Asia " (p. 289) ; N. I. KHODUKIN, and B. N. RAKHINSKY, " The fleas of gerbils from the valley of Fergana " (p. 299) ; A. I. LISOVA, " Spines of certain plants as substitutes for entomological pins " (p. 302) ; M. Z. LEITMAN, " Complement fixation and agglutination reactions in intestinal diseases " (p. 304) ; J. P. VLASOV and N. I. KHODUKIN, " On sandflies from burrows in the neighbourhood of

Ashkhabad" (p. 325); M. S. Sofiev, "On the characteristics of Middle Asia strains of tick-fever spirochaetes" (p. 362); L. M. Isajev, "Spontaneous spirochaetosis in Uzbekistan dogs" (p. 377); N. Kevorkov, and E. Schleicher, "The helminths of cats in Tashkent" (p. 433); N. I. Khodukin, "A review of the latest data on diseases of the typhus fever group (rickettsioses)" (p. 464).

The following papers, dealing with leishmaniases, spirochaetoses and dysenteries of protozoal origin, are of more general interest.

A. S. Kovtun, "Observations on Kala-azar at the Kokand Station of tropical medicine" (p. 196): a description of cases of combined visceral and cutaneous leishmaniases in children, and of three cases of kala azar in children born in December and showing symptoms in March and April. These cases are interesting in view of the fact that in Kokand sandflies first make their appearance in April or May.

V. P. Petrov, "On the primary lesion in Kala-Azar" (p. 222): an account of two cases of leishmaniasis in children in which visceral infection was preceded by cutaneous sores containing parasites.

A. R. Fialkovsky and O. A. Tveritina, "Epidemiology of canine leishmaniasis in Tashkent, 1934–1935" (p. 349): there was an increase in the incidence of canine leishmaniasis, probably due to improved registration; in view of the epidemiological significance of dogs in human disease, the destruction and/or treatment of infected dogs is advocated.

In another paper, "Kala-Azar in Turkmenistan" (p. 458), the same author records the occurrence of cases of kala azar from the former Transcaspian Region of Turkestan, where its presence was doubted.

Two papers are devoted to observations on the animal carriers of relapsing fever, transmitted locally by *Ornithodorus papillipes*. M. S. Sofiev, and D. L. Okhrimenko, "On the reservoir of the virus of tick-fever" (p. 180): strains were recovered from local rats (*Rattus rattus turkestanicus*) and inoculated into guineapigs and human beings (cases of G.P.I. and schizophrenia). As compared with human strains the rat strain was more virulent to guineapigs. In man this strain brought about more marked rises in the temperature curve, and spirochaetes remained in the blood continuously up to 21 days without subsequent relapses.

M. N. Keshinian, "The rôle of the domestic rat, *Rattus turkestanicus*, as reservoir of tick-fever in Tadjikistan" (p. 257): the author established the presence of spirochaetes in 1·6 per cent. of rats from human dwellings and regards this animal as the natural reservoir of tick-fever in the country.

N. I. Khodukin and M. N. Soshnikova, "Investigations on the reservoir of the virus of typhus fever in Tashkent" (p. 395): as the result of a series of observations and experiments the authors conclude that Tashkent does not represent an endemic focus of typhus fever, the cases observed being due to introduction from outside. The infection is, however, endemic in local rats, but the virus is weak. It was found that ticks (*Ornithodorus*), when fed on infected guineapigs, retained the virus up to 54 days, but were incapable of transmitting it through the bite.

N. A. Chapurskaja-Bagenova, M. Z. Leitman, and L. P. Fialkovskaja, "Epidemiology of balantidiosis, with a comparative study of *Balantidium coli* and *B. suis*" (p. 227): investigations conducted at a pig-breeding farm revealed 6 infections with *Balantidium* among 44 workers, the infection rate in the pigs being

100 per cent. The insignificant incidence among human contacts indicates a low degree of susceptibility to the parasite. However, the extremely rare occurrence of balantidiasis among the general population of Tashkent points to pigs as the source of human infection.

V. A. LYSUNKINA, "On the treatment of amoebic liver abscess with Yatren" (p. 243): description of a case of amoebic liver abscess successfully treated with Yatren. *C. A. Hoare.*

VAN THIEL (P.) & SAUTET (J.). Etude concernant l'existence des biotypes anthropophiles de l'*Anopheles maculipennis.* [**Feeding Proclivities of** *A. maculipennis.*]—*Bull. Soc. Path. Exot.* 1937. Feb. 10. Vol. 30. No. 2. pp. 186–193.

The authors describe experiments designed to explain the choice of host by mosquitoes of certain races of *Anopheles maculipennis.*

The apparatus made use of was that described by REUTER (see this *Bulletin,* 1936, Vol. 33, p. 415). This consisted of two large cages separated by a small chamber. A man slept in one cage and a pig in the other, mosquitoes being liberated in the chamber between them so that they could pass towards either mammal at will. In the middle of the night the openings were closed and subsequently the mosquitoes in the two cages counted, a record being made of those which contain blood. The results of eight experiments are set out at length, together with readings of temperature and humidity. The authors find it impossible to suggest any general explanation of their results. Sometimes a considerable preponderance of the mosquitoes (*elutus* and *labranchiae*) choose the one host, at others the other; there appears to be no consistent relation to temperature or humidity. It would probably be justifiable to draw the general conclusion that the apparatus is a promising one, but that much more work must be done with it before results will be comprehensible. *P. A. Buxton.*

VAN THIEL (P.). Quelles sont les excitations incitant l'*Anopheles maculipennis atroparvus* à visiter et à piquer l'homme ou le bétail? [**What Stimuli guide** *A. maculipennis* **in seeking Food?**]—*Bull. Soc. Path. Exot.* 1937. Feb. 10. Vol. 30. No. 2. pp. 193–203.

The author describes experiments designed to analyse the reactions of the female mosquito when seeking blood.

It will be remembered that REUTER (see this *Bulletin,* 1936, Vol. 33, p. 415) made use of an "artificial arm" through which warm water could be circulated. Investigations on caged mosquitoes, when active at dusk, showed that the principal factor tending to make them attempt to bite was temperature. It was only when the apparatus approached blood heat that the insects moved towards it, but when they did so they showed a differential reaction, preferring a wet to a dry surface. Working with *A. maculipennis atroparvus* and a similar apparatus the present author finds that the attractive power of filter paper is not increased if it is made damp with sweat or with chemical substances which are present in sweat.

An observation was made that fresh dung is attractive to mosquitoes; this is not apparently due to odorous substances perceived by the human nose but to the fact that the dung gives off carbon dioxide. If this gas is released through the mouth of a tube projecting into a cage, mosquitoes of several species fly towards it; in most experiments,

but not in every one, the number that did so exceeded those which moved towards a stream of air, even if warm and moist. The observation is interesting and perhaps suggestive: but it is difficult to accept the author's view that the insects are normally attracted to their host by carbon dioxide given off by the skin, for he has not demonstrated, or attempted to demonstrate, that they are capable of perceiving the very low concentration of this gas, which may be found at or near the surface of the body. The hypothesis that mosquitoes are led to enter a house or a stable because the concentration of CO_2 may be higher in those places, might not be difficult to prove or disprove, but is apparently put forward without support. *P. A. B.*

HACKETT (L. W.). **Recent Additions to Our Knowledge of "Anopheles maculipennis" Races.**—*Bull. Health Organisation.* League of Nations. 1937. Feb. Vol. 6. No. 1. pp. 1–16. [31 refs.]

(Before studying the present contribution to the racial question in *A. maculipennis*, the reader should consult a previous paper on the same subject by the author [see this *Bulletin*, 1935, Vol. 32, p. 138], and another by himself and MISSIROLI [*loc. cit.*, p. 809]). Reiterating his conviction that egg-characters "still constitute the only known method of identifying individuals," the author states that these have permitted "the setting-up of eight or nine distinct forms of which at least six are well established by biometric, genetic and physiological tests, as well as by field studies on their bionomic characters." In view of the "vast range" of *A. maculipennis*, it is considered "not unlikely that new local varieties will continue to be found." Experience shows that these should be described under the following headings: Eggs; larvae (with special reference to hairs nos. 1 and 2, on the second, and fourth and fifth abdominal segments respectively); external harpaginal spine (in the male adult); bionomics (larval habitat); and habits.

With reference to the geographical distribution of races, egg-surveys in regions not previously investigated have led to the following results. Sweden: The races found include *messeae*, *typicus* and *atroparvus*. Yugoslavia: Forms met with were *messeae*, *typicus*, *elutus*, *labranchiae*, and probably *subalpinus*. North Africa (Algeria, Tunis and Morocco): Only *labranchiae* and the nearly allied form *sicaulti* are known to occur, and the existence of *elutus* in the coastal region has not been confirmed. Syria: An unpublished report by KLIGLER (1935) mentions *elutus* as the only member of the *maculipennis* group; this was discovered to be breeding in fresh water, but no brackish water breeder was found. In the U.S.S.R. the latest actual survey is that by the present author and BARBER (1935): it would appear that "only *messeae* and *typicus* are found in the interior, while *elutus* (*sacharovi*) occurs on the Caspian and *atroparvus* on the Black Sea near Odessa."

It has been suggested by MISSIROLI (1935) that "inconstancy of temperature is an important factor in larval ecology and may help to explain the distribution of the races and species."

According to DIEMER and VAN THIEL (1936), *A. maculipennis* in any one region consists fundamentally of only three races or biotypes. Thus "North of the Alps we find *atroparvus*, *messeae* and *typicus*, in the Iberian Peninsula *atroparvus*, *subalpinus* and *typicus*, in Southern Italy *labranchiae*, *melanoon* and *typicus*, and in the Balkans *elutus*, *subalpinus* and *typicus*." It is asserted by the author that "most of

the widespread anopheline species of the world have been found on examination to be complexes of this sort." As regards *A. maculipennis typicus*, "Hackett & Barber (1935) found a distinct type in the Caucasus with minute floats, and it is not unlikely that it will eventually be divided up into geographical sub-races."

Although in Western and Southern Europe most of the malaria for which *A. maculipennis* is responsible is carried by *atroparvus*, *labranchiae* and *elutus*, in certain districts such as the Volga basin, the region of the Danube above the delta, and Central Yugoslavia, the malady is "undoubtedly due to *messeae* or *typicus* or both," possibly on account of a local deficiency of stabled domestic stock, which might otherwise form a barrier.

The "mystery of *atroparvus*," a mild or even a virulent malaria-carrier in some regions, but harmless in others, is as yet "far from being well understood." *E. E. Austen.*

Rice (J. B.) & Barber (M. A.). **The Varieties of** *Anopheles maculipennis* **in a Region of Greek Macedonia.**—*Bull. Entom. Res.* 1937. Oct. Vol. 28. Pt. 3. pp. 489–497.

The authors publish a large number of observations made in Greek Macedonia in 1932–36, pointing out that what they have noticed may perhaps not be true for other countries, even for other parts of Greece. They confine themselves to two forms of *A. maculipennis*, *typicus* and *messeae*; *sacharovi* (*elutus*) is regarded as a separate species and excluded.

It will be remembered that *typicus* and *messeae* are best distinguished by the eggs; these may generally be separated, even with a hand lens, by the black and white pattern of the upper surface, and at a higher magnification by the "roughness" of the floats: *typicus* shows transverse bands in the pattern and has rough floats. The present authors have examined 749 batches of eggs, each laid by a single female. Within each batch there is great uniformity, but, as is clearly shown by a table, the variation between batches is rather complex, even though only two characters are available for study. Making use of the surface pattern the authors recognized six groups (A to F), of which the first three conformed at least approximately to *typicus*, the others to *messeae*; classifying their eggs in this way they found peaks in B and E, but none of the other four patterns are very rare, even the least frequent representing 4 per cent. of the whole. If the eggs are classified into six categories by floats the results are essentially similar. It is clear from the table that there is a high degree of correlation between the two characters; for instance, eggs which fell into the extreme *messeae* group (F) by their pattern invariably had smooth floats; but *messeae* eggs, which came rather near *typicus* in pattern (Group D) showed great diversity in floats.

It would be of great interest and perhaps of practical value if one could decide to what extent these differences are genetic and to what extent they are caused by factors in the environment, but as it is impossible to secure pairing in captivity one cannot make much progress by breeding. The authors have, however, taken the matter a step further by isolating wild, fertilized females, securing their eggs and rearing from them female offspring. These will not pair, but if they are given a blood meal they will sometimes lay sterile eggs. Working in this way 7 *typicus* adults and their 38 daughters were studied; all

the daughters were identified as *typicus* by their eggs. The 46 daughters of 22 *messeae* parents were less consistent, several of them laying eggs which had to be classified as *typicus*.

It has been observed in several parts of South Europe that there is a tendency for the type of egg to change as spring passes into summer. The authors have endeavoured to study this by taking individual females and causing them to lay successive batches of eggs while they were kept at different temperatures. They found that an individual female will lay paler eggs after being kept at a higher temperature than she did at a low temperature, but they have not obtained such great changes in egg type as other workers have recorded elsewhere.

Both *typicus* and *messeae* were found infected with sporozoites in nature, but the event is so rare that the authors cannot satisfy themselves as to the relative importance of the two. They found no significant difference between the races' choice of house or stable as a resting place. *P. A. B.*

ROUBAUD (E.) & TREILLARD (M.). Observations biologiques sur le biotype *cambournaci* de l'*Anopheles maculipennis*. [**The Biology of the** *cambournaci* **Biotype of** *Anopheles maculipennis*.]—*Bull. Soc. Path. Exot.* 1937. May 12. Vol. 30. No. 5. pp. 383–387.

The Portuguese variety of *A. maculipennis* described by the authors in 1936 as *cambournaci* is distinguished morphologically from var. *atroparvus*, to which it is nearly allied, by the peculiar smallness of the egg-floats. Subsequently specimens of the new variety, or biotype, were collected by Treillard in S. France (Camargue), and both Portuguese and French stocks have been bred experimentally for several generations, and closely compared one with another and with *atroparvus*. In the Portuguese and French stocks of the var. *cambournaci* the biological characters observed are absolutely identical, showing a certain differentiation in this respect from the var. *atroparvus*, and confirming the validity of the distinction based on the egg-characters.

Although *atroparvus* breeds freely in a confined space, it is exceptional for this mosquito to mate in cages of small dimensions, and in the laboratory a container measuring one-twentieth of a cubic metre is the smallest in which it is usually possible to obtain the fertilisation of females, followed by the deposition of batches of fertile eggs. In the present paper details are given of three breeding experiments—one with *atroparvus* from Vendée, one with a single female and a single male of Portuguese *cambournaci*, and a third with three females and a solitary male of *cambournaci* from Camargue—in small netting cages measuring 14 cm. × 7·5 cm. × 4 cm. It was found that in spaces so limited the mating of the *cambournaci* biotype, whether from Camargue or Portugal, regularly and readily occurred, while in similar conditions it took place only exceptionally in the case of Vendéan *atroparvus*. Thus the biotype *cambournaci* would seem at present to be the most strictly stenogamous of all the varieties or races of *A. maculipennis*, and is perhaps the easiest to keep in European laboratories.

A further series of experiments showed that *A. cambournaci* is a more active biological type than *atroparvus*. At the same season of hibernation, and in the same rearing conditions, the authors compared the

winter behaviour of the stock of *atroparvus* from Vendée and that of the two *cambournaci* stocks. It was found that, in identical conditions of food-supply and temperature, females of the *cambournaci* biotype, subjected in winter to continuous warmth, become fertile more quickly than do those of *atroparvus*. In the case of the latter, in females of different ages selected at hazard, there was the trace of a winter sexual diapause, partly interrupted by the artificial action of heat. In the experiments with females of the biotype *cambournaci* no comparable lag in the advent of reproductive maturity was seen, and individuals, as a whole, reached the breeding condition sooner than did the representatives of *atroparvus*. It is to be inferred that in nature the hibernation of *cambournaci* represents a principal mode of over-wintering brought about by the lowering of the temperature, and liable to yield quickly to the application of heat. It does not correspond to the phenomenon of spontaneous ovarian blocking characteristic of the true hibernating females of *atroparvus* ; the reactivation of the latter, in natural conditions at the commencement of their winter life, is always more or less difficult.

The physiological differences thus displayed by the two biotypes under consideration would justify their being regarded as distinct, even though such interpretation were not based on morphological differences in the egg, verified in successive generations. *E. E. A.*

ROZEBOOM (L. E.). On *Anopheles albitarsis* Lynch Arribalzaga in Panama. —*Southern Med. Jl.* 1937. Sept. Vol. 30. No. 9. pp. 950–951. With 3 figs.

MAJID (Syed Abdul). **An Improved Technique for marking and catching Mosquitoes.**—*Records of the Malaria Survey of India.* 1937. Mar. Vol. 7. No. 1. pp. 105–107. With 1 fig. & 1 plate.

The paper describes a method by which a simple pump may be constructed with which to apply a distinctive dust or powder to live mosquitoes. It is found that a convenient powder to use is what is sold as "gold powder," used for decorative writing. This is inert, not sticky, and easy to recognize.

The author also describes an ingenious apparatus for catching mosquitoes at rest. It consists of three tubes inserted in a rubber bung, the details being figured. In using it, one sucks air through the first tube, the mosquito being sucked up the second and drawn into the third, which is an ordinary test tube and removable from the bung.

P. A. B.

JACK (Rupert W.) ; JACKSON (C. H. N.) ; MELLANBY (Kenneth). **Water and Fat Content of Tsetse Flies.** [Correspondence.]—*Nature.* 1937. Jan. 2. Vol. 139. No. 3505. p. 31 ; Apr. 17. No. 3520. pp. 674–675 ; May 22. No. 3525. p. 883.

Some progress in understanding the effect of atmospheric humidity from insects has been made by the admittedly crude method of exposing insects to particular conditions, weighing them and again

weighing them after they have been dried to constant weight. From these figures the proportion of water in the insect as a whole is calculated.

In the present correspondence, Jack, and also Jackson, put forward the view that it is for many purposes better to calculate the proportion of water after deducting the amount of fat in the insect's body. They point out that fat is more or less inert and that its exclusion from the calculation may be held to give a truer picture of the state of the insect.

Mellanby is doubtful whether it is worth while to take the weight of the fat when calculating the proportion of water. He points out that there are many structures and substances in the insect, such as skeleton and gut contents, all of which ought to be subtracted to obtain the sort of result which Jack, Jackson, and others would like to see. Moreover, the quantity of circulating "blood" varies enormously with the state of the insect. One may sometimes dissect a tsetse fly and find the tissues supplied with a large quantity of blood, while at other times very little is there. But the tissues themselves appear to be adequately supplied with water in both cases. He takes the view, therefore, that as it is highly desirable to know more about the effect of climatic conditions on the living parts of insects, we must go much further into the matter and by proper development of technique obtain information about the weight of living tissues. *P. A. B.*

MARSHALL (J. F.) & STALEY (J.). **Some Notes regarding the Morphological and Biological Differentiation of** *Culex pipiens* **Linnaeus and** *Culex molestus* **Forskål (Diptera, Culicidae).**—Reprinted from *Proc. Roy. Entom. Soc. London.* Ser. A. General Entomology. 1937. Feb. 15. Vol. 12. Parts 1–2. pp. 17–26. With 2 figs. [17 refs.]

The authors call attention to the curious discrepancies that have been observed in the habits of *Culex pipiens* in different parts of Europe; in some places it attacks man, in others not at all or only rarely. The distinction was observed as long ago as 1890 by FICALBI, who also pointed out certain anatomical differences between the two types of insect. The matter continued to receive much attention, particularly after 1929, when several authors independently discovered a type of *C. pipiens* which was able to mate in small cages and to lay eggs without taking a meal of blood.

The present authors have studied several strains of both types of mosquito and show in a table the points of difference, both in larvae and in adults. They find that several of the characters which have been used are not reliable when material from different parts of Europe is compared, and give full details about the inconsistencies between one strain and another. The table shows the mean values of the siphonal index and the number of branches of the tufts on the siphon: it would perhaps be of still greater value if more information had been printed about the scatter about the mean.

The view is put forward that it would be less confusing if the two types of *Culex* were regarded as different species. The authors give grounds for believing that *Culex pipiens* of Linnaeus is dark, with spots on the ventral surface of the abdomen, and that it does not take the blood of man. The other species readily bites man, but will lay eggs without a blood feed: it seems that the correct name is *C. molestus* (Forskål 1775). *P. A. B.*

GALLIARD (Henri). Ponte et évolution larvaire de *Mansonia indiana* et *Mansonia annulipes* dans le delta du Tonkin. [**Egg Laying and Larval Life History of** *Mansonia indiana* **and** *Mansonia annulipes* **in the Delta of Tonking.**]—*C. R. Soc. Biol.* 1937. Vol. 125. No. 19. pp. 491–492.

The breeding habits of *Mansonia* are of some practical importance, because certain members of this genus are proved or suspected carriers of *Filaria bancrofti* and *malayi.*

In most parts of the tropics mosquitoes of the genus *Mansonia* are particularly associated with the plant *Pistia,* the female laying her eggs on the underside of the leaf and the larva and pupa tapping the internal atmosphere which is found in the body of the plant. But in the delta of the Red River in Tonking the plant to which the larvae and pupae are found attached is nearly always *Pontederia* (*Eichornia*), even though *Pistia* is abundant and found close to the villages. But the female mosquito never lays her eggs on the leaf of *Pontederia* either in nature or captivity, and it seems that in nature she generally chooses the floating water fern *Salvinia.* *P. A. B.*

DE MEILLON (Botha) & GRAY (F. C.). **The Control of a Species of Chironomus Meigen (Dipt. Chironomidae) in an Artificial Lake by increasing the Salinity.**—*South African Med. Jl.* 1937. Sept. 25. Vol. 11. No. 18. pp. 658–660. With 1 chart.

A hollow in the ground near Port Elizabeth was used as a dam to supply water to a power station and water was diverted into it. The conditions became exceedingly favourable to the breeding of *Chironomus* of an unidentified species. The adult gnats, not in themselves harmful, occurred in such great numbers as to be an intolerable annoyance to dwellers near the dam, who were compelled to shut their doors and windows at night ; owing to the great abundance of the insects work was stopped in a printing press.

The breeding of the insects was controlled by pumping sea water into the dam and it was found that about 3 per cent. salinity was necessary. *P. A. B.*

SCHWETZ (J.). Notes éthologiques sur les phlébotomes du Bas-Congo. [**Ethological Notes on the Phlebotomus of the Lower Congo.**] — *C. R. Soc. Biol.* 1937. Vol. 124. No. 10. pp. 1015–1017.

In Belgian Congo, at any rate in certain regions, several species of *Phlebotomus* are much commoner than has hitherto been supposed, but of these only one (*Ph. schwetzi*) is definitely known to suck human blood. The author has met with *Phlebotomus*, whether in native villages or European settlements, only where there are cesspits. In these places, usually without water-flushing, and either roofed or open to the sky, the insects are sometimes very numerous, biting at all times of the day and night, although likewise found in native huts and even in European dwellings. The fondness of *Phlebotomus* for latrines and their characteristic odour is difficult to understand, since the insects do not breed in faecal matter. As to their pathogenic rôle, if any, nothing is yet known. *E. E. A.*

RAYNAL (J.). Contribution à l'étude des phlebotomes d'Indochine. III. Distribution géographique des phlebotomes de l'Indochine Nord. Quelques aspects de leur biologie. [**Geographical Distribution of the Phlebotomus of Northern Indo-China, and Certain Aspects of their Biology.**]—*Arch. Inst. Pasteur d'Indochine.* 1936. Apr. Vol. 6. No. 23. pp. 349–374. With 5 maps & 17 figs. on 5 plates. [40 refs.]

Based on the author's investigations in Northern Indo-China in 1934-35, the following conclusions emerge from the papers whereof the present forms the final chapter.

In the region dealt with, *Phlebotomus* appears scarcely to occur in the deltaic and maritime zones of Tonking and Annam. It is met with especially among the rounded hills which form the transition to the mountainous regions, but in the highlands it also occurs in certain valleys, at altitudes of from 1,200 to 1,600 metres. Up to the present, between the 15th and 25th parallels of north latitude, the following ten species have been met with : *Ph. stantoni* ; *Ph. caylii* var. *campester* ; *Ph. barraudi* ; *Ph. sylvestris* ; *Ph. iyengari* ; *Ph. argentipes* ; *Ph. hibernus* ; *Ph. silvaticus* ; *Ph. morini* and *Ph. tonkinensis*. Of these the first six were already known to occur in neighbouring countries, especially India ; the other four are new. With the exception of *Ph. barraudi*, which alone exists at altitudes of 1,200 and 1,600 metres, all these species have been found exclusively in the lowlands, at from 30 to 150 metres above sea level. *Ph. stantoni*, which seems to disappear during certain months of winter, is a northern species, while *Ph. baylii* var. *campester* is a more southern form, occurring more constantly throughout the year, and its area of distribution would seem to extend well to the south of the 15th parallel.

Ph. silvaticus, *Ph. iyengari*, and *Ph. hibernus* are " wild " species, but the majority of the others appear to be " semi-domestic " in habit, sheltering among the surroundings of human habitations, and in the vicinity of small domestic animals ; in the latter case whether this is in order to obtain food, or simply for the sake of shelter is difficult to say. *Ph. barraudi*, found in the immediate proximity of man, has, by the precipitin test, been shown to be capable of imbibing human blood ; but for the rest, leaving out of account those captured in inadequate numbers, numerous facts seem to negative all idea of their feeding at the expense of man. It is probable that further species, and localities wherein *Phlebotomus* occurs have still to be found. The presence of *Ph. argentipes* in Indo-China is vouched for by the finding of a solitary example in Central Annam, and the insect is likely to exist in the south. The demonstration of the occurrence of this species in a region free from Indian kala azar might be the starting point of interesting observations and discoveries. *E. E. A.*

THOMSEN (Ellen) & THOMSEN (Mathias). Ueber das Thermopräferendum der Larven einiger Fliegenarten. [**The " Preferred Temperature " of the Larvae of Certain Sorts of Flies.**]—Reprinted from *Ztschr. f. vergleichende Physiologie.* 1937. May 18. Vol. 24. No. 3. pp. 343–380. With 19 figs. [23 refs.]

The purpose of the authors is to define the reactions to temperature of larvae of house-flies (*Musca*) and of related species.

The authors used a long trough, one end of which was heated and the other cooled, so as to set up a temperature gradient. In this trough

they put dung of horse or other animal and the larvae under experiment. By an ingenious device they overcame the tendency of the dung to become dry at the hotter end of the apparatus. They reared their insects at 25°C. and introduced batches of larvae into the apparatus, observing the temperature at which the larvae congregated, and finding that for larvae of a particular age there was great consistency. For the first half of larval life *Musca domestica* congregates at the surprisingly high temperature of 30–37°C. Later, but before it begins to migrate away from the food, the preferred temperature falls, and when the prepupal stage is reached the preferred temperature is below 15°C.

It is interesting to compare the temperature chosen by *Musca* and by other larvae. The larva of *Haematobia stimulans*, which breeds in cow-pats in the open, and mostly in spring and autumn, chooses 19–23°C., corresponding with low temperatures which prevail in its normal environment. But the *Lyperosia irritans* larva, which breeds in cow-pats in high summer, has (perhaps for that reason) a higher preference, about 27–33°C.

The authors' view is that choice of temperature is one of the things which influences the larva's behaviour in nature; they give a short discussion of other factors, such as light and moisture. *P. A. B.*

PARKER (J. R.). Intoxication par l'arsenic chez l'homme et les animaux à la suite des campagnes de destruction des sauterelles. [**Poisoning of Man and Animals from the Use of Arsenic in destroying Grasshoppers.**]—*Bull. Office Internat. d'Hyg. Publique.* 1937. May. Vol. 29. No. 5. pp. 966–971.

GAUD (M.). Méthodes employées au Maroc pour la destruction des sauterelles et accidents causés au bétail et à l'homme par l'emploi des produits toxiques.—*Ibid.* pp. 977–991. With 2 maps.

The two papers deal with the possible danger to man or domestic animals that arises from the use of arsenical compounds for destroying grasshoppers and locusts. It will be remembered that very large quantities of sodium arsenite and other salts of arsenic are used in certain areas and that the making of poisoned baits and their distribution is to a great extent in the hands of uneducated farm labourers in many parts of the world. Moreover, as the bait usually consists of bran, molasses and arsenic it is a substance which cows, sheep, etc., are glad to eat.

The authors point out that where the directions are properly followed, cases of poisoning of cattle are rare and that no damage occurs to human beings. Where deaths of farm animals have been investigated they have been due to gross carelessness or occasionally to deliberate poisoning. When it is properly distributed, poisoned bait is scattered so thinly that it is impossible for a grazing animal to absorb a harmful dose of it. The men who have to mix the material or distribute it should be careful to wash their hands afterwards, giving particular attention to cleaning beneath the nails. It need hardly be added that boxes, sacks, etc., which have contained arsenic must be kept under lock and key, and destroyed by burning as soon as possible.

The second author records that analyses have been made of the water in shallow pools close to areas over which the bait had been distributed. Arsenic was not found to be present in the water.

Several other short papers in the same issue of this periodical confirm the general conclusion. It is widely known among agricultural entomologists that the use of arsenic on a grand scale does not cause fatalities provided reasonable care is shown.] *P. A. B.*

i. ASHMORE (S. A.) & HUGHES (A. W. McKenny). **Use of Certain Coal-Tar Naphtha Distillates for the Destruction of Bed-Bugs.**—*Lancet.* 1937. Feb. 27. p. 530.
ii. HOLBORN (J. M.). **Eradication of Bed-Bugs.** [Correspondence.]—*Ibid.* May 1. pp. 1074–1075.
iii. MELLANBY (Kenneth). **Methods of destroying Bed-Bugs.** [Correspondence.]—*Ibid.* June 5. p. 1372.
iv. ASHMORE (S. A.) & HUGHES (A. W. McKenny). **Methods of destroying Bed-Bugs.** [Correspondence.]—*Ibid.* June 12. pp. 1434–1435. [Summaries appear also in *Bulletin of Hygiene.*]

i. The authors report successful fumigation of houses infested with bed-bugs by using group of coal-tar distillates known as "naphtha." It appears that the method is not yet fully worked out, but that it is very promising. The liquid, of which an approximate specification is published, has a distillation range of 160°–190°C. It doubtless contains a very large number of different chemical substances which have not been identified, and it is not known which of them possess the insecticidal properties. The vapour of this liquid kills bugs, the lethal concentration not being known, but the authors' custom being to use one gallon for 750 cubic feet with an exposure of 18 to 24 hours; the liquid is applied with a spray. The effect is much greater at higher temperatures and it is recommended that rooms should be heated at least to a temperature above 60°F. before the fumigation is commenced. The method has been used in about 200 houses and flats, successfully in the great majority of instances. The reader assumes that a single fumigation is sufficient, though that is not stated.

It has been shown that the vapour of this distillate is not toxic to experimental mammals, though operators require to wear a mask for comfort. The vapour clears quickly from a room when it is opened up. Needless to say, it is inflammable.

ii. The correspondent discusses the good and bad points of this fumigant. He has experimented with it in small vessels in the laboratory at a concentration corresponding to one gallon in 750 cubic feet and finds that bugs frequently recover after experiments up to six hours; eggs are more resistant than larvae or adults. He points out that there is a danger that some samples of this very roughly identified material may contain mesitylene, which is known to be toxic to man, and emphasizes the risk of fire and possibility of explosion from static electricity.

The conclusion is reached that the material is in many ways far from ideal. The view is put forward that the ordinary householder might make much more use than he does of proprietary contact insecticides applied with a small vapourizer worked by hand. In this way minor infestations at least might be dealt with with very little trouble or expense.

iii. A second correspondent calls attention to another simple, useful remedy. He finds that ordinary methylated spirit 30 parts, with water 70 parts, runs well into cracks and is fatal to larval or adult bugs if they become wetted with it; many but not all eggs are

killed. The liquid is not inflammable nor harmful to bedding or furniture. The method is recommended as a minor one, which the householder can employ.

iv. The original authors dissent from some of Mr. Holborn's views. They hold that danger to man from mesitylene "is not to be apprehended." Even if vapour leaked into an adjoining room where there was a naked light the danger of fire is very little. They have modified the original technique and now spray the naphtha upon a blanket which is suspended close to the wall, tending to increase the concentration near the spot where the bugs live. They agree that simple methods, which the housewife can use, have value when the infestation is a small one. *P. A. B.*

JOHNSON (C. G.). **The Relative Values of Man, Mouse, and Domestic Fowl as Experimental Hosts for the Bed-Bug,** *Cimex lectularius* **L.**—*Proc. Zool. Soc. London.* Ser. A. 1937. Pt. 1. pp. 107–126. [16 refs.]

It has been known for many years that bed-bugs (*Cimex lectularius* and *rotundatus*) feed readily in the laboratory and in nature on many sorts of birds and mammals. It is the author's purpose to provide precise, quantitative facts about the life-history of bugs bred on different hosts. There are two possible ways of obtaining this information; by rearing the insects on different hosts under precisely determined standard conditions or by keeping bed-bugs and host in association for long periods under conditions resembling those which occur in nature. In the present paper the author sets out results obtained by the first method only.

Cimex lectularius has been reared on man, mouse and fowl. In order to compare the efficiency of these hosts the author selected seven particulars, each capable of being expressed numerically. Among them are the fertility of the adult, the weight of blood taken at a meal (adult and larva), the fresh and dry weight of the insects, etc. On these points the paper contains a very large body of fact collected with great care and tabulated and considered thoroughly: the data are submitted to appropriate statistical analysis. From the work the fact emerges that the bug will not only feed on several hosts, but go successfully through the life cycle and lay eggs on all of them. There is however, a definite tendency for the mouse to be better as a host than man or fowl. On the mouse the speed of development at constant temperature is slightly greater, the mortality less and the adults heavier, so that they lay more eggs following a single meal of blood: all these differences are probably due to the fact that on the mouse insects take a rather greater meal of blood than on other animals. But the mouse is not in every respect the host on which the insect lives most successfully, for bugs which have been fed on man and then starved live longer than those fed on mouse. Though the hosts differ from one another and though many of the differences are statistically significant, it would be broadly true to say that on all of them the insects were able to live and breed successfully. The author's own summary states that "The differences in the life of bed-bugs living on different hosts—man, mouse, and fowl—in nature are more likely to be due, primarily, to differences in the behaviour of the insects in the presence of those hosts rather than to the physical

effects of the meals taken from them." It is curious and interesting that in certain respects significant differences were found betweeen bugs fed on two different individual men. *P. A. B.*

LADELL (W. R. S.). **A New Apparatus for separating Insects and Other Arthropods from the Soil.**—Reprinted from *Ann. Applied Biol.* 1936. Nov. Vol. 23. No. 4. pp. 862–879. With 2 figs. & 1 plate. [20 refs.]

The paper describes an apparatus which will separate insects, including very minute ones, from a considerable sample of soil. It appears to be much more efficient than anything which has been previously used.

The general method is that the sample of soil is broken up in a dense liquid, a saturated solution of magnesium sulphate being applied; in this the soil is stirred by a stream of air, the animals being brought up in a froth and eventually delivered on the surface of black filter paper. The apparatus is described and figured in full (it is understood that it will shortly be put on the market by a firm of instrument makers). With this apparatus it is possible to deal with seven pounds of soil in half an hour, concentrating the insects, etc., most of which are alive, in a very small volume almost free of soil particles. The efficiency of the method may be judged from the fact that it revealed a population of 120 million insects, principally small Arthropods, per acre of new grassland in south-east England.

The apparatus is mentioned here because it may be of great service in mapping the exact distribution of early stages of *Phlebotomus* or *Culicoides*. *P. A. B.*

PARKER (R. R.), PHILIP (Cornelius B.), DAVIS (Gordon E.) & COOLEY (R. A.). **Ticks of the United States in Relation to Disease in Man.**—*Jl. Econom. Entom.* 1937. Feb. Vol. 30. No. 1. pp. 51–69. [52 refs.]

The paper is a useful summary of which the scope is indicated by the title. It appears that no less than five diseases are transmitted by ticks (though not exclusively by ticks) in the U.S.A.; Rocky Mountain spotted fever, tularaemia, relapsing fever, Colorado tick fever (of unknown cause, but apparently a distinct entity) and tick paralysis. Reference is also made to the exanthematous fever of the Mediterranean, which has not yet been recorded in the country.

P. A. B.

PARKHURST (Howard J.). **Trombidiosis (Infestation with Chiggers).**—*Arch. Dermat. & Syph.* 1937. June. Vol. 35. No. 6. pp. 1011–1034. With 6 figs. [62 refs.]

The paper, which was read at a congress of dermatologists, gives a general account of infestation by the animal which is called a harvester in this country, special attention being given to pathology, treatment and other matters likely to appeal to a medical audience.

The paper opens with a general account of existing knowledge about the geographical distribution of the Trombidiidae (some of which is hardly relevant, for it seems to be assumed that all members of this family attack man when in the larval stage). The author then passes

to the life-history so far as it is known, with particular reference to "*Trombicula irritans*" in North America; also the method by which man is attacked. The actual point of attack is frequently just within the mouth of a sweat duct or hair follicle; here the mite anchors itself and pours out a digestive ferment which attacks and liquefies the epidermis, the result of this digestive activity being then swallowed. The author then gives a precise description of the lesion on the skin, illustrated with microphotographs. The stages through which the lesion develops are defined as "spastic ischemia, exudative arteriolitis, vasolysis with hemorrhage and vesiculation, followed by primary resorption and terminal repair."

For exterminating the mites when they are on the person the application of benzine or kerosene followed by a prolonged bath is suggested. In order to allay the irritation, a brief application of alcohol should be followed by the use of a boric acid ointment containing one or two per cent. of phenol.

The paper concludes with a valuable list of 62 references of papers published since the subject was reviewed by TOOMEY in 1921. Certain minor errors in the non-medical part of the paper might perhaps have been avoided if the manuscript had been read by a zoologist and by someone fully informed about modern work on tropical typhus.

P. A. B.

EVANS (A. M.) & LEESON (H. S.). Notes on Variation in *Anopheles rivulorum* Leeson in East Africa, with Description of a New Variety.—*Ann. Trop. Med. & Parasit.* 1937. Oct. 22. Vol. 31. No. 3. pp. 383–386. With 1 fig.

MACFIE (J. W. S.). Notes on Ceratopogonidae (Diptera).—Reprinted from *Proc. Roy. Entom. Soc. London.* Ser. B. Taxonomy. 1937. June 15. Vol. 6. Pt. 6. pp. 111–118.

Contains a key of species of Culicoides found in Malaya and neighbouring countries.

DE BERNARDI (Bartolomé). Contribución al estudio de la parasitosis intestinal en la población infantil y adulta de la ciudad de Paraná (E. R.). [**Intestinal Parasitism among Inhabitants of Paraná.**]—*9a Reunión Soc. Argentina Patol. Regional, Mendoza, 1, 2, 3, y 4 octubre 1935.* Vol. 2. pp. 1305–1328. With 6 figs.

The population of the town of Paraná is not stated, but the authors examined the faeces of 1,789 persons, 1,445 adults and 344 children. No deductions of value can be drawn from so small a number of children; suffice it to say that parasitism is, judging by the results in these cases, very high; 80·2 per cent. were infested; 77·1 were passing protozoa and 18·3 per cent. helminthic ova, and often more than one kind. In spite of this, the children generally seem to be healthy, although 38·3 per cent. passed Giardia, and 23·5 per cent. *E. hystolytica.* The commonest helminthic infestation was Enterobius, in 9 per cent., hookworm in 1·1 per cent. only.

Of the 1,445 adults 1,177 harboured parasites (81·4 per cent.), 536 had one only, 651 had two or more. In them, as in the children, protozoa predominated; of those with one only 490 were protozoal and 36 helminthic. Among the adults Enterobius was the commonest

helminthic parasite (5·3 per cent.), *Taenia saginata* next (1·5), hookworm only 4 (0·26 per cent.), *E. histolytica* was found in 28·7 per cent. Giardia in 14·5 per cent. *H. H. S.*

CICCHITTO (Angelo M.). I primi casi di balantidiosi in Somalia. Nota preventiva. [**First Cases of Balantidiosis recorded in Italian Somaliland.**]—*Arch. Ital. Sci. Med. Colon. e Parassit.* 1937. Feb. Vol. 18. No. 2. pp. 118–119.

A shepherd, aged 36, suffered from diarrhoea, 10–12 actions daily, with mucus and blood, and accompanied by tenesmus and pain in the iliac fossae and along the colon. Examination of the stools revealed *Balantidium coli* and three others of the patient's family were also found infested. They lived in the same house and followed the same occupation. These are claimed to be the first record of this infestation in Italian Somaliland. *H. H. S.*

GIROLAMI (Mario). Un caso di balantidiosi osservato in Somalia. [**A Case of Balantidiosis seen in Somalia.**]—*Arch. Ital. Sci. Med. Colon. e Parassit.* 1937. Feb. Vol. 18. No. 2. pp. 120–124.

The same claim of being the first case of balantidiosis is made for this author's patient, a soldier of 25 years, born in Agrigento, but sent to serve in Chisimaio, Somalia, in April 1935. He remained well until April 1936 when he suffered from diarrhoea and was admitted to hospital with a diagnosis of "entero-colitis, probably amoebic." Examination discovered Balantidium but not Entamoeba. [No dates are given in the preceding paper, so it is not possible to say which has the priority.] *H. H. S.*

KIKUTH (Walter). Chemotherapeutische Versuche mit Sdt. 386 B, einer Arseno-Stibio-Verbindung. [**Chemotherapeutic Trials with Sdt. 386 B, an Arsenic-Antimony Compound.**]—*Arch. f. Schiffs- u. Trop.-Hyg.* 1937. Dec. Vol. 41. No. 12. pp. 729–735. [26 refs.]

The high chemotherapeutic index of two arsenic-antimony compounds, Sdt. 283 and Sdt. 246 synthesized by SCHMIDT, in the treatment of experimental bartonella anaemia of rats stimulated a search for newer and even more active compounds. This resulted in the production of preparation Sdt. 386 B, whose surprising activity has been mentioned previously. [See this *Bulletin*, 1935, Vol. 32, p. 227.]

Sdt. 386 B, containing 18 per cent. arsenic and 20 per cent. antimony, is a brown powder readily soluble in water. Large doses produce neither symptoms of acute arsenic nor of acute antimony poisoning. The lethal subcutaneous dose for rats is 750 mgm./kgm. bodyweight and the well tolerated dose 500 mgm./kgm. In heavy bartonella infections 0·2 mgm./kgm. is active and 0·1 mgm./kgm. has some action in most cases. In other words the chemotherapeutic index is from 1 : 2,500 to 1 : 5,000, which is something extraordinary, such an index being hitherto unknown in therapy.

In experimental infections the drug exerted some action on trypanosomes, on rabbit syphilis, on fowl spirochaetosis and on the spirillum of rat bite fever. It was inactive against leishmania, but the strains used were also uninfluenced by all other antimony compounds. Positive results were obtained in the treatment of mice infected with

Schistosoma mansoni and of cats infected with *Opisthorchis felineus.* Some results were also obtained in rickettsia infections of guineapigs and streptococcal infections of mice.

This extraordinarily widespread activity suggested that the therapeutic effects depended not on specific action but on stimulation or mobilization of the defence forces of the body, but this hypothesis had to be abandoned since no such stimulation effect was seen when the preparation was used in conjunction with specific drugs against bird malaria, haemoproteus infections, dog piroplasmosis, rat leprosy and canary pox.

These results and the exceptional activity of the compound in rat bartonella anaemia led to its clinical trial in diseases of man and animals. In animals, despite the author's expectations, it was inactive in anaplasmosis.

Various workers reported that, in man, it was efficacious in leishmaniasis of the skin and especially of the mucous membrane, in lymphogranuloma inguinale, in intermittent macular fever, in Bang's disease and in clonorchiasis. In early, although not in later, cases of Gambian sleeping sickness it worked well, but in general it was inferior to Bayer 205 (see this *Bulletin*, 1936, Vol. 33, p. 170); very small doses (0·2 gm.) were used however, from which results could hardly be expected. It produced some disappearance of ulceration in leprosy.

The most noteworthy results were those obtained by MANRIQUE in 14 severe cases of Oroya fever, a disease of very high mortality for which hitherto there was nothing more than symptomatic treatment. Doses of 0·1 to 0·3 gm. Sdt. 386 B repeated two or three times brought about the disappearance of bartonella from the circulating blood and initiated an increase in the erythrocyte count and a rapid improvement in the general condition. The earlier the treatment was started the greater was the prospect of a rapid and permanent cure. In some cases a total of 5·7 gm. was tolerated without untoward effect. In the secondary stage of the disease, the drug acted favourably on the skin eruption although a primary action on the cell inclusions could not be demonstrated; after treatment, the nodules became small, shrunken and old in appearance.

The drug appears then to have a specific action on Oroya fever as marked as on experimental bartonellosis of rats, and a practical superiority over other antimony and arsenic compounds which justifies further trial. *F. Murgatroyd.*

CAMERON (Thomas W. M.). The Internal Parasites of Man in Eastern Canada.—Reprinted from *Med. Log.* Vol. 2. No. 1. pp. 50–63. With 4 figs.

LEE (Douglas H. K.). **The Settlement of Tropical Australia.**—*Med. Jl. Australia.* 1936. Nov. 21. 23rd Year. Vol. 2. No. 21. pp. 707–712.

In this general article the author comments on the economic, social, physiological and medical aspects of the problem of settlement in the tropical areas of Australia. After reviewing the evidence collected in various investigations and the opinions expressed by many authorities he broadly outlines a scheme for future progress through the application of physiological knowledge and methods of research to the problems of life and work in tropical climates. *G. P. Crowden.*

ZIEMANN (Hans). Vom Problem der Akklimatisation der weissen Rasse in den Tropen.—*Deut. Med. Woch.* 1937. Apr. 23. Vol. 63. No. 17. pp. 666–672. [17 refs.]

BOHROD (Milton G.). **Keloids and Sexual Selection. A Study in the Racial Distribution of Disease.**—*Arch. Dermat. & Syph.* 1937. July. Vol. 36. No. 1. pp. 19–25. [30 refs.]

That keloids are more common among negroes than among white persons is, as the author says, common knowledge. The ratio is variously estimated in America as 19 : 1, 14 : 1 and 9 : 1. He would explain the difference thus—

"A tendency to keloid formation is present in some persons, and this tendency is hereditarily transmitted. However the idea may have started, it came to be believed that there was a close magical association between the presence of cicatrizations and fertility. It may be that the first keloids were the unpremeditated results of cutaneous injuries or diseases; but later they were artificially produced by incisions into the skin. Other well established principles of the magic art caused the choice of puberty as the time for making the incisions and sexually important areas as the sites for the designs.

"The persons with the best designs, designs which stood out boldly from the surrounding skin, mated early and left the largest number of progeny; these, in turn, also possessed the tendency for excessive connective tissue growth. As the proportion of these scarred persons within a tribe became larger and the magic virtue of keloids became more firmly established, the persons without the ability to produce these scars found it difficult or even impossible to acquire mates. In time the members of the tribe were practically all descendants of those who possessed the tendency to keloid formation."

"The process described is in every essential that called by Darwin sexual selection." *A. G. Bagshawe.*

BARRETT (R. E.). **A Portable Steam Disinfestor.**—*East African Med. Jl.* 1937. July. Vol. 14. No. 4. pp. 132–134. [Summary appears also in *Bulletin of Hygiene.*]

A steam disinfector is described which was designed primarily for dealing with the problem of louse infestation in native institutions such as jails, asylums and hospitals. The apparatus is made throughout of sheet steel of not less than 20 gauge. The disinfecting chamber is a cone, narrow at the top, wide at the base. The base is welded by means of a steam-tight joint to a cylindrical boiler of similar diameter to the base of the cone. The boiler chamber is separated from the disinfecting chamber by a metal plate perforated with ½-inch holes. Handles are provided for lifting the apparatus and the top aperture of the cone is fitted with a rimless lid which slightly overlaps. The apparatus is stood on a detachable metal stand 12 inches high, beneath which a fire or 4-burner stove is placed. The dimensions are: top diameter of cone, 12 inches; base diameter of cone, 24 inches; height of cone, 36 inches; height of boiler, 7 inches. The cost of construction by a Kampala tinsmith was 50*s*. The apparatus is capable of dealing with about 12 blankets or 25 complete prison suits at a time. *C. C. Okell.*

MEDICAL AND SANITARY REPORTS.

SIERRA LEONE (1936).

The Colony and Protectorate of Sierra Leone has an area of nearly 28,000 sq. miles, a little less than that of Scotland. The sea coast is 210 miles long and extends from Kiragba on the border of French Guinea to the Mano River on the Border of the Republic of Liberia.

Vital Statistics.—Year by year the Registrar-General continues to extend the system of registration (see this *Bulletin*, 1936, Supp., p. 25* and 1937, Supp., p. 29*) in the Colony and Protectorate. There are now, in addition to the Chief Registrar, Deputy Registrar, and Chief Registrar's Clerk, 27 Registrars (chosen from Medical Officers and educated but non-medical citizens) and 23 Deputy Registrars (these posts being filled by dispensers and educated citizens). It is again pointed out that at present figures cannot be regarded as a true assessment of the state of the public health. For Freetown alone, where control is rigid and registration reasonably complete, the data are dependable: also, a crude estimate of the mid-year population is possible in the case of Freetown only, other population figures repeating the facts obtained during the Census of 1931. The relevant data read as follows:—

Area	Population	Births	Birth Rate	Deaths	Death Rate	Infant Deaths	I.M.R.
The Colony ...	103,378	2,537	24·5	2,490	24·0	584	230
Freetown ...	62,314	1,437	23·0	1,297	20·8	303	210
The Protectorate	1,672,058	2,453	?	733	?	146	?

The above facts are supplied by the Chief Registrar, an appointment held *ex officio* by Dr. J. A. A. Duncan, M.C., Assistant Director of Medical Services (Health), who wisely observes of registration efforts in Sierra Leone, "The machinery exists and only time and custom will induce the African to register, and this object is better obtained by persuasion than coercion." Dr. Duncan and his subordinates are to be congratulated on the success which is attending their interesting endeavours in this important branch of public health work.

European Officials resident numbered 211, with an average number resident of 145. No deaths occurred but 16 invalidings were recorded, 2 due to *neurasthenia*, the remainder to 14 different causes. *European non-officials* resident were 504, with an average number resident of 356. Of these, 21 were invalided and 4 died. Only one invaliding and one death could be directly attributed to tropical diseases.

There were 960 *African Officials* resident with an average number resident of 930. Two deaths and 11 invalidings occurred, none attributable to tropical diseases.

The average strength of *African Troops* (R.W.A.F.F.) was 369. One death occurred and during the year 275 men were on the sick list. The total strength of *African Police* was 266. Four died and 174 were sick at some time during the year.

Maternity and Child Welfare Work continued to make good progress during the year despite the fact that no increase in accommodation

was possible. To the Maternity Ward of the Connaught Hospital 607 patients were admitted, 402 gave birth in the Ward and 6 maternal deaths occurred. In addition 205 women were treated in the Ward for various ailments. A new Maternity Training Centre with 4 private wards, accommodation for 40 patients, ante- and post-natal and Infant Clinics, is to be erected.

The voluntary training of midwives, commenced two years ago, has continued to make satisfactory progress ; two trainees have obtained the local C.M.B. and six others are still in training.

At the Ante-Natal Clinic 716 women were on the register as new cases and total attendances numbered 5,510. Women delivered of their babies in the Maternity Ward of the Connaught Hospital and mothers delivered in their own homes are advised to attend the *Post-Natal Clinic* for supervision, advice and necessary treatment. During the year, 477 such cases were dealt with, and 1,157 attendances recorded. Twice a week throughout the year *Infant Welfare Clinics* are held at the Maternity Centre ; 536 infants were registered and 12,584 subsequent attendances recorded. The *Health Visitors* attached to this Centre made 10,189 visits to 787 newly born-babies.

It is to be noted that Infant Welfare and other Clinics were inaugurated at every Medical Officer's station throughout the year. This movement was very popular with the Paramount Chiefs and the results most gratifying. Dr. W. ALLAN describes in some detail an account of the 1936 *Health and Baby Meeting*, which was held from March 1st to 7th.

At the various *Mission Hospitals* also Maternity and Child Welfare Work has been successfully carried out. The authorities of the Princess Christian Mission Hospital opened a new clinic at Yongro, where good progress is being made.

School Hygiene.—Routine inspections continue to be impossible owing to shortage of necessary staff (see this *Bulletin*, 1937, Supp., p. 30*) but visits have been made as occasion demanded. Some improvement in the sanitary condition of the schools is reported. The elementary principles of hygiene continue to be taught in Colony and Protectorate Schools.

Public Health, Sanitation, etc.—Intensive vigour characterized the routine measures to combat insect-borne diseases both in the Colony and the Protectorate with very satisfactory results. A detailed report of the work carried out in the Freetown area is included in the Annual Report under review.

With regard to *sewage disposal* it is said conditions remain the same as in 1935 (see this *Bulletin*, 1935, Supp., p. 25* and 1936, Supp., p. 26*). The introduction of a water-borne sewage system in Freetown is under consideration. In the Protectorate, where pit-latrines are universal, good progress was made with the digging of latrines in the smaller villages which previously had no sanitation. In Freetown *Refuse disposal* schemes continue to function satisfactorily and in the Protectorate the bush-type incinerators are becoming increasingly popular (see this *Bulletin*, 1937, Supp., p. 30*).

In Freetown *water supplies* were restricted during the dry season. The question of augmenting existing sources with a view to preventing the recurrent shortage each dry season continues to receive careful attention and there is reason to hope that these inconveniences will shortly be disposed of. During the year 16 new public standposts were erected and 18 new private services laid on. Supplies in the

Protectorate remain as described in these pages a year ago. Steps are being taken with a view to providing pipe-borne supplies to certain towns.

Owing to increased activity in the mining areas more and more *labourers* tend to be employed. Mining camps are inspected by Sanitary Officers; the steady increase in the numbers of labourers employed has greatly increased the work of sanitary supervision, etc., of areas and made it difficult at times to maintain the necessary force of sanitary labourers.

Housing and Town Planning conditions remain much as described in the 1935 Report (see this *Bulletin*, 1937, Supp. p., 30*).

As regards *foodstuffs, etc.*, markets continue to be inspected daily and weekly reports as to their condition are rendered. Other premises are inspected regularly and nuisances reported and abated; foodstuffs exposed for sale and found unfit for human consumption are seized and destroyed (see also this *Bulletin*, 1937, Supp., p. 30*).

The *Health Weeks* have proved so markedly successful that they are to be made annual events.

In the absence of new recruits the *training of Sanitary Personnel* was confined to refresher courses for existing sanitary inspectors. The practice of bringing these men to headquarters from their outstations for further instruction has greatly contributed to their increased efficiency.

Port Health Work.—Though cases of yellow fever, plague, and smallpox, were reported from neighbouring colonies, Freetown was not in quarantine at any time during the year. Ships entering the Port numbered 825; deck passengers disembarking numbered 1,731 and embarking 1,204, with Kroo boys disembarking 18,963 and embarking 16,753. Of these 576 deck passengers and 2,262 Kroo boys were vaccinated, while 837 of the former and 4,659 of the latter were passed through the Disinfecting Station.

Hospitals, Dispensaries, etc.—An increase in the numbers both of in- and out-patients treated at the various Hospitals is reported, the greatest increase occurring in the Protectorate. It is believed the increases are not evidence of a greater amount of sickness, but rather reflect the growing readiness of the people to seek treatment by European methods.

At the European Hospital improvements carried out provide increased accommodation: a new hospital is to be erected and should be completed early in 1938. One new Protectorate type hospital was erected at Port Loko during 1936. The five *Mission Hospitals* subsidized by Government continue to carry out excellent work and report increases in the numbers of patients treated.

Two new Dispensaries were opened in the Protectorate; there are now 8 such treatment centres in the Colony and 14 in the Protectorate.

The record of bed accommodation available and work accomplished during 1936 at Government and Mission Hospitals reads as follows:—

Hospital	Beds	In-patients	Deaths	Out-patients
1 European	14	187	2	474
10 African	334	5,594	375	110,527
5 Mission	98	21,945(?)	?	1,281(?)

[It will be noted that in-patients at Mission Hospitals appear to have been twenty times more numerous. The facts are reproduced as they are given on p. 45 of the Report under review. Probably the figures should be reversed.]

The principal diseases and numbers treated at various institutions during the year included *acute and chronic bronchitis* 12,884, *acute and chronic rheumatism* 10,808, *hernia* 9,701, *yaws* 8,202, *malaria* 7,942, *wounds and injuries* 6,082. Textual commentaries relating to morbidity experience are briefly summarized hereafter.

Malaria cases treated totalled 7,931 with 4 deaths, the distribution by race and type of infection being :—

	Benign Tertian	Quartan	Sub-tertian	Cache-xia	Unclassi-fied	Deaths
Europeans ...	8	7	65	—	47	—
Africans ...	51	199	746	258	6,550	4
Totals ...	59	206	811	258	6,597	4

There were also 2 non-fatal cases of *blackwater fever* among Europeans, and 8 among Africans with 4 deaths.

During the year arrangements were made for the purchase of quinine at all Post Offices throughout the Colony and Protectorate ; the drug was also distributed by Political Officers on tour in remote parts of the country. These arrangements which have been much appreciated bring quinine within the easy reach of everybody. At the *Laboratory* where 3,461 blood films were examined, 1,308 were positive for malaria parasites and the findings 936 *subtertian*, 236 *quartan*, 3 *benign tertian*, 133 mixed infections, the latter including 131 subtertian and quartan infections.

One non-fatal case of *yellow fever* was reported in an African soldier of the Sierra Leone Battalion R.W.A.F.F. stationed at Daru 214 miles from Freetown. The patient had been on leave at Baiama, a village 45 miles distant. All precautions were taken and an intensive inspection of surrounding villages undertaken ; blood specimens taken in Baiama proved negative, but at two other villages positive reactions were 42·8 and 55·5 per cent. respectively. The blood specimens were taken from children under 10 years of age, and the results of protection tests suggest that an epidemic has occurred in the district in recent years.

No case of *cerebrospinal meningitis, relapsing fever, plague*, or *human rabies* was reported. Rat-catching continued, 6,892 were caught and 4,644 dissected, all being negative for *P. pestis*. The dog-catching gang captured 1,849 stray dogs and these were destroyed. The majority of the 99 persons who received anti-rabic treatment were dog-catchers. The brains of 13 dogs and 7 cats were examined, 13 (12 dogs, 1 cat) proving positive for negri bodies.

The outbreak of *smallpox* which began in 1932 is gradually burning itself out as the result of vaccination. During the year a single undetected case in the Protectorate gave rise to 12 cases introduced into Freetown ; a small localized outbreak resulted which was easily controlled. The distribution of cases and deaths was :—

Area	Cases	Deaths	Vaccinations
Colony	59	9	13,063
Protectorate :—			
Northern Province	107	13	5,575
Southern Province	225	29	11,253
Totals	391	51	29,891 (given as 30,082 in the Report)

Of the Colony cases 29 occurred in Freetown ; the type was virulent and 8 deaths occurred ; of the total Colony vaccinations 8,448 were carried out in Freetown.

Three non-fatal cases of *tropical typhus* were definitely diagnosed by the Weil-Felix reaction, all were of the OX 19 type. One of the cases occurred in a European engaged in the investigation of the disease and was almost certainly a Laboratory infection. Professor R. M. GORDON of the Sir Alfred Jones Research Laboratory who directs the pathological work of the Colony, and is Consulting Pathologist to the Sierra Leone Government, says of the disease, " It is not yet possible to state how widespread is its range in Sierra Leone, but it seems probable that further investigation will establish its presence in the Protectorate as well as in the Colony . . . . The experiments at present being carried on in the Liverpool School of Tropical Medicine Laboratory in Freetown suggest that two types of the disease are occurring among the human population, and that the so-called ' X 19 ' type is endemic amongst the rat population."

Nineteen cases of *enteric fever* with 5 deaths were reported. Of the total 16 occurred in Freetown (one an imported case) with 2 deaths. All the cases were sporadic and no common source of infection could definitely be traced. Exposed and unprotected foodstuffs are potential sources of infection, while the numerous cesspits may have some bearing upon incidence. At the Laboratory where Widal tests were applied to 107 specimens of blood serum for the specific agglutinin of the enterica group, 13 reacted positively with *Bact. typhosum* and the same organism was isolated by bacteriological methods from blood or faeces in 4 other cases.

A further increase in the incidence of *dysentery* is recorded with 575 cases and 7 deaths : eleven were non-fatal cases among Europeans. Among all cases recorded types of infection were *amoebic* 264, *bacillary* 10, unclassified 301. Among 1,535 faecal specimens examined at the laboratory 17 contained *E. histolytica* cysts, in 44 the entamoebae were found free, in 36 cases *E. coli* cysts were found and *E. coli* free in nine.

No cases of *tuberculosis* were reported among Europeans, but there were 274 African cases with 26 deaths ; 231 cases and 20 deaths were due to the *pulmonary* form of the disease. Case incidence figures must be accepted with considerable reserve (see this *Bulletin*, 1937, Supp., p. 33*). Cases of *pneumonia* among Africans totalled 271 with 29 deaths and of *bronchitis and broncho-pneumonia* 12,989 cases and 10 deaths.

Cases of *avitaminosis* numbered 969 as compared with 1,311 in the preceding year ; the decrease is attributed to increased prosperity of the people and better standards of living. As a result of the investigations of Drs. A. CLARK and E. J. WRIGHT into the cyanogetic properties of the

various species of yams, steps were taken to instruct the public in the preparation of the tuber for human consumption. Ten cases of *beriberi* occurred with two deaths in the Protectorate. Three cases of *cancer* among whites were reported with one death, the fatal case being that of an American sailor landed at Freetown *in extremis*, death occurring shortly after admission to hospital. Among Africans there were 42 cases and 6 deaths. *Rheumatism* is a serious cause of disablement among Africans: 10,808 cases received treatment and only 14 of these were Europeans.

Helminthic infestations are widespread throughout Sierra Leone. Records show 6,581 cases of *ascariasis*, 404 of *ankylostomiasis*, 234 of *taeniasis* and 98 of *schistosomiasis*; only 3 European cases are recorded. Among the 1,535 faecal specimens examined at the laboratory, 335 contained ancylostome ova, 229 ascaris, 127 trichuris and 2 *S. mansoni*.

As regards *venereal diseases* a slight increase is noted in the numbers of cases of both *syphilis* and *gonorrhoea*, of the former 769 and of the latter 2,756. Dr. A. J. JOHNSON, Medical Officer in charge of the V.D. Clinic, Freetown, contributes a tabulated statement of cases dealt with during the year. New cases numbered 579 and subsequent cases 11,321, gonorrhoea accounting for nearly 60 per cent. of all cases. Increased facilities for the treatment of *yaws* were probably responsible for an increase in the numbers treated, 8,202 as compared with 6,539 in the preceding year.

Other diseases mentioned in the Report include *trypanosomiasis*, of which 3 non-fatal cases were reported from the Protectorate. New cases of leprosy numbered 195.

Extracts from some of the *Special Reports* contained in the Annual Report under review have already been mentioned under such headings as *Maternity and Child Welfare*, *Baby Week*, *Venereal Diseases*, etc., and it remains to refer briefly to other contributions of a special nature. In the Report of the *Surgical Specialist* (Dr. Q. STEWART) details of the operative work carried out during the year are tabulated and seven surgical cases of unusual interest are described. Dr. E. S. WALLS deals with the work of the *Eye Clinic* which re-opened on May 25th; from that date to the end of the year 464 new cases and 1,236 attendances for treatment were recorded. An analysis of these cases is supplied. At the *Kissy Lunatic Asylum* 64 persons were admitted or re-admitted, 5 died, one absconded, and at the end of the year there were 96 patients on the register of the institution. At the *Freetown Prison* 112 cases were admitted to the *Gaol Hospital*, and two died during the year. From prisoners with sentences of three months or over the 360 specimens sent to the Pathological Laboratory for examination, included 312 faecal specimens, 36 bloods, and 12 samples of sputa. One hundred of the faecal specimens gave negative results, but among the positives ancylostome ova alone or ancylostome and ova of other helminths were found in 133 cases; ascaris alone or with other helminths 32 times; taenia, trichuris and *E. histolytica* were also found. Eighteen of the blood specimens were positive for malaria parasites, but no specimen of sputum contained acid fast bacilli.

Scientific.—Mention has already been made of the fact that the pathological work of the Colony is under the direction of Professor R. M. GORDON of the Sir Alfred Jones Research Laboratory (see above). It remains to say that the Report of the Pathologist at the Connaught hospital Laboratory (Dr. E. A. RENNER) incorporates details of the work performed by Professor Gordon and his assistants

and that carried out at the Hospital Laboratory during the year. Under such headings as *malaria, yellow fever, typhus, prisons*, etc., above, reference has been made to laboratory activities and findings but it remains to say that in addition to other serological work, 723 Kahn tests were carried out with 356 positive and 23 doubtful results; sputum examinations totalled 337 and of these 79 were found to contain acid fast bacilli.

Financial.—Total expenditure on Medical and Sanitary Services during 1936 amounted to £66,893 of which £48,744 represented Medical Expenditure. *P. Granville Edge.*

COLONY OF THE GAMBIA (1936)

The Colony of the Gambia was created in 1843, previously, from 1807, having been under the Government of Sierra Leone, and was constituted a separate government 45 years later, in 1888. It now consists of the island of St. Mary (on which is Bathurst, the seat of Government), British Kombo, Albreda, the Ceded Mile, the territories of Brefet and Bajana and MacCarthy Island. This last forms the line of demarcation between the Upper and Lower portions of the Gambia River. The total area of the Colony and Protectorate is 4,132 sq. miles.

Vital Statistics.—Attention is again called to the fact that the estimated population is a doubtful figure and will remain erroneous until the next general census is carried out. The principal vital statistical facts relating to Bathurst may be set out as follows :—

Item	Africans	Europeans and Whites
Estimated Population	14,141	195
Total Births recorded	357	—
Birth Rate	25·2	—
Total Deaths recorded	431	—
Death Rate	30·5	—
Infant Deaths recorded	132	—
I.M.R. per 1,000 live births ...	369·7	—
Stillbirths recorded	50	—

Among the Europeans and Whites, the *General European Population* (excluding Government Officials) numbered 126, and among this group no births or deaths were recorded.

European Officials resident numbered 69, with an average number resident of 59. No deaths were recorded, but 37 officials were on the sick list, subtertian malaria being responsible for 18 cases, the remaining 19 being mostly due to minor ailments. Three were invalided. *African Officials* resident numbered 387 with an average number resident of 346. No deaths were recorded, but 320 were on the sick list, and two were invalided during the year.

Maternity and Child Welfare Work.—In the Clinic Ward, Victoria Hospital, Bathurst, 56 ante-natal patients made 1,090 attendances, 72 confinements were conducted, and 119 births were recorded. Of the latter, 101 were live births and 13 died, so that the Clinic I.M.R. was 128·7 per 1,000 live births. In the Out-patients Department

there were 268 babies on the registers and 228 patients attended the ante-natal clinics.

During the year it was decided to extend the Child Welfare activities outside Bathurst, and Sukuta was decided upon as a suitable centre since it was within easy reach of the capital. Buildings were loaned by the Methodist Mission, the cost of necessary alterations, etc., being met by the Provincial Emergency and Development Fund. At this new centre 284 patients made 1,890 attendances; 8 ante-natal patients made 36 attendances, and deliveries numbered 4.

School Hygiene.—The only information relating to this subject records that pamphlets and booklets on health matters were distributed to schools, and that the Dental Surgeon inspected 1,673 school-children, 35 per cent. of whom were given dental treatment.

Public Health, Sanitation, etc.—The year under review was characterized by a steady increase in the scope of the activities of the Medical and Sanitary Department. Not only was progress maintained in Bathurst, but a most promising start was made with sanitary reforms in the Protectorate (see under *Child Welfare, Hospitals, Leprosy*). Special attention was devoted to mosquito control measures; a considerable amount of tree cutting was recorded while routine work concerned with the grading, clearing and oiling of earth drains was continued. Energetic action was taken to deal with the thousands of crab holes which constitute prolific breeding places for mosquitoes; investigations are being undertaken into the habits and life history of these crabs with a view to devising some method of dealing with them effectively. Inadequate drainage is said to be the most important problem with which Bathurst has to deal; the numerous earth drains which are responsible for considerable recurrent expenditure for upkeep, repairs, etc., should be replaced by properly constructed concrete drains.

Methods of *Sewage disposal* remain for all practical purposes unchanged, but alternative methods are receiving consideration, experiments with septic tank latrines are in progress, and a number of public latrines were constructed during the year. In the Protectorate, most of the pit latrines collapsed during the rains and bush septic tank latrines were sent to the large outstations. The system of *refuse disposal* (see this *Bulletin*, 1937, Supp., p. 36*) functions for the most part satisfactorily.

With regard to *water supplies* the old water mains are gradually being replaced throughout Bathurst and a chlorination plant has been installed at the waterworks. The position regarding *housing* in Bathurst is unchanged (see this Bulletin, 1937, Supp., p. 36*). The Report observes "Nearer and nearer to us each year creeps plague. We are in no position to withstand it, and shall not be until the miserable hovels so prevalent here, are razed to the ground and proper rat-proof buildings erected in their stead."

A special section of the Report deals with various aspects of medical work in the Protectorate. Sanitary Inspectors with labour gangs have been stationed at the more important centres, the Public Health Ordinance applied to these places, and attention was devoted to the construction of latrines, incinerators, etc.; travelling vaccinators visited the areas at intervals and market sites improved.

Port Health Work.—During the year 259 ships were boarded; deck passengers were inspected and kept under surveillance when necessary. All the 101 aeroplanes landing had clean Bills of Health. Quarantine

regulations were applied to Senegal and Dakar on account of plague, to Senegal for yellow fever, and the Upper River Province was declared an infected area during the year under review.

Hospitals, Dispensaries, etc.—During 1936 medical facilities were considerably augmented in the Protectorate. In addition to the Welfare Centre established at Sukuta (see above) a bush hospital and dispensary were established at Kaiaf, about 50 miles further inland, and a Leper Camp constructed by a progressive Chief at Buruko in MacCarthy Island Province. All these ventures which met with immediate success were made possible by the sympathetic attitude of Government, the willing co-operation of Administrative Officers and the financial assistance of the Provincial Emergency and Development Fund. The record of work at the principal centres of treatment reads as follows :—

Treatment Centre	In-patients			Out-patients Treated
	Admitted	Total Treated	Deaths	
Victoria Hospital Bathurst ...	1,313	1,350	134	18,701
Prison Hospital Bathurst ...	—	31	—	146
Georgetown Hospital ...	425	449	61	7,134
Bwiam Hospital	—	94	23	" over 7,000"
Basse Dispensary	—	—	—	4,195
Kau-ar Dispensary	—	—	—	5,010
Kaiaf Dispensary	—	—	—	" over 3,000"
Kerewan Voluntary Dispensary	—	—	—	3,022

The following notes briefly summarize the principal references to morbidity experience contained in the Report under review.

Malaria.—At the Bathurst Hospital where 726 patients received treatment, 615 were out-patients. Two hospital deaths were recorded. Types of infection were distributed as to 33 *benign tertian*, 4 *quartan*, 514 *subtertian* (of which 425 were out-patients) 1 malarial *cachexia*, and 174 were unclassified. At the Georgetown and Bwiam Hospitals (data grouped) 743 patients were treated and only 9 were in-patients. *Subtertian* infections predominated with 530, there were 3 cases of *benign tertian*, one each of *quartan* and *cachexia*, and 207 were unclassified. No case of *blackwater fever* was recorded.

It is stated that there is a noticeable decrease in the numbers of mosquitoes seen in Bathurst ; this is largely attributed to the extensive tree-cutting and other control measures which have been so energetically carried out.

No case of *yellow fever* was recorded during the year. All Europeans are now inoculated against the disease. The inspectorate staff was maintained and weekly inspections of compounds, etc., carried out (see this *Bulletin*, 1937, Supp., p. 36*). The larval index for Bathurst for the year was 0·15 ; this figure is in marked contrast to figures for outstations in the Protectorate (where they range from 0·23 to 5·68) and testify to the value of regular house-to-house inspections. No case of *plague* was reported though the disease exists in countries surrounding Gambia. During the year 9,343 rats were caught and periodic smears taken, but all gave negative results for *P. pestis*.

Trypanosomiasis is said to be on the increase; travellers report a marked increase in the numbers of tsetse fly seen in some up-river areas. In the Protectorate a hyperendemic area of the disease extends from MacCarthy Island to Kau-ur, on the North bank it reaches to the French border, extending on the South into Western Jarra, Foni, and the Kombo districts on the coast. The infected area corresponds roughly with the rice growing country, and the problem of control is an unusually diffcult one. It is stated that a large number of patients who appear to have none of the symptoms clinically typical of sleeping sickness are found to have enlarged cervical glands and give positive gland punctures; these chronic low-grade cases constitute a serious danger.

Altogether, 1,972 cases of the disease were recorded; 1,000 of the 1,274 cases treated in the Protectorate were dealt with at the new centres established at Bwiam and Kaiaf (see above). At Bwiam also experimental tsetse fly traps were tried out, but met with little success. The demonstration at Bullock by the Agricultural Superintendent (see this *Bulletin*, 1937, Supp., p. 37*), who showed how a typical tsetse valley could easily be converted and easily controlled was not followed up by the inhabitants.

As regards hospital records at Bathurst 36 in-patients were treated with 7 deaths and there were 453 out-patients. At the Georgetown and Bwiam Hospitals there were 221 in-patients, 1,186 out-patients and 27 deaths were recorded.

A serious outbreak of *smallpox* occurred in the Upper River Province in June and July, and 140 cases with 24 deaths were recorded. It is stated that many cases were concealed, despite the fact that serious measures were applied to persons guilty of concealment of cases or of withholding information; in these circumstances, the actual number of cases or deaths is unknown. Prompt measures were taken to deal with the outbreak; contacts were isolated, many compounds burned, and an extensive vaccination campaign instituted. Vaccinations in Bathurst numbered 1,904 and in the Protectorate 18,564; of the latter 13,241 were performed in the Upper River Province. Within a month the situation was under control and no further cases were reported.

Five non-fatal cases of *enteric fever* comprised 3 in-patients and 2 out-patients treated at the Victoria Hospital, Bathurst. *Dysentery* gave rise to 196 cases distributed as to 129 amoebic, 62 bacillary, and 5 unclassified. Eleven deaths were due to this cause. At the Bathurst Hospital 48 in-patients and 103 out-patients were dealt with, and at the Georgetown and Bwiam Hospitals in-patients treated for this disease numbered 14 and out-patients 31. Until better arrangements can be made for the disposal of excreta in the Protectorate, enteric fever and dysentery (and helminthic diseases) will continue to be responsible for much sickness and mortality, especially among infants and children.

According to hospital returns there were 160 cases of *tuberculosis* (all forms) with 11 deaths; 144 of the cases and all the deaths were ascribed to the *pulmonary* form of the disease. The figures are no indication of actual prevalence; it is stated that until housing conditions are greatly improved, incidence will continue to remain high. Hospital returns also record 4,677 cases of *bronchitis* and *broncho-pneumonia* with 14 deaths, and 175 cases of *pneumonia* with 25 deaths. It is also stated that many patients in the Protectorate presenting pneumonic symptoms which are not substantiated by physical signs on examination are believed to represent the acute stage of other

diseases. Six such cases were suspected of being *tropical typhus*, but though these were not confirmed serologically, a 50 per cent. mortality indicates the seriousness of the condition and the urgent need of pathological investigations to be undertaken. Steps are being taken to meet this need.

Of *helminthic diseases* the Report observes "the figures give no indication of the prevalence of these diseases—especially is this the case with regard to *ankylostomiasis*, the incidence of which must run into tens of thousands." Hospital returns show 1,040 cases of *ascariasis*, only 136 of *ankylostomiasis*, 90 *taeniasis*, 4 *dracontiasis*, 47 of *schistosomiasis*, and "other helminths" 8. The Report states that "the incidence of these diseases must be considerably higher in the Protectorate" and in this connexion it is not without interest to note that only 11 cases of ankylostomiasis and 274 of ascariasis were recorded in Protectorate hospitals.

In the text of the Report reference is made to 434 cases of *leprosy*; hospital returns record only 358 cases, 284 of these being treated in hospitals in the Protectorate. Reference has already been made to the new leper camp at Buruko (see Hospitals above). This centre, which takes in cases from the Upper River and MacCarthy Island Provinces dealt with 108 patients during the year; it is stated that where continued treatment with Alepol is available many patients show definite improvement. The need for another Leper Camp for North and South Bank Provinces is to be met by the establishment of a centre near Bwiam.

Venereal Diseases are unmentioned in the text of the Report, but Hospital Returns show 197 cases of *syphilis*, and 642 of *gonococcal infections*. *Yaws* was responsible for 4,046 cases. The disease is said to be definitely increasing, while incidence increases with distance from the coast; only 154 cases were dealt with in Bathurst, but in the Georgetown Hospital there were no less than 1,948, over a quarter of the total patients treated for all causes of sickness (see also this *Bulletin* 1937, Supp., p. 37*).

Other diseases mentioned include *whooping cough* 283 cases (275 in Bathurst alone), *influenza* 87 cases, *tetanus* 35, and *measles* only 2 cases. Although only 35 cases of *tetanus* are recorded—with 13 deaths—it may be noted that total deaths due to this cause in the Colony and Protectorate numbered 46 and 34 of these were ascribed to *tetanus neonatorum*. Rules for midwives have been introduced with a view to reducing the number of cases of this easily preventable disease.

Scientific.—Dr. MURGATROYD of the Liverpool School of Tropical Medicine was engaged in chemiotherapy studies in relation to trypanosomiasis. The Victoria Hospital Laboratory Report briefly records the numbers of specimens of various kinds examined during the year, but results of these examinations are not supplied.

Financial.—Actual expenditure on Medical and Health Services during 1936 amounted to £30,895 as compared with an estimated expenditure of £32,336. Medical Department expenditure accounted for 11·9 per cent. of the total expenditure of the Colony.

P. Granville Edge.

REVIEWS AND NOTICES.

NOCHT (Bernard) [M.D., Professor at the Institute of Tropical Medicine, Hamburg] & MAYER (Martin) [M.D., Professor at the Institute of Tropical Medicine, Hamburg]. **Malaria. A Handbook of Treatment, Parasitology and Prevention.** With a Foreword by Sir Rickard CHRISTOPHERS, C.I.E., F.R.S.—pp. viii + 196. With 25 figs. & 2 coloured plates. 1937. London: John Bale Medical Publications, 85 Great Titchfield Street, W.1. [10*s.* 6*d.*]

This is an English translation of the second edition of a small handbook on malaria, originally intended to provide a useful account of this disease suitable for post-graduate students and medical men attending lectures or courses at the Hamburg School of Tropical Medicine. It forms a well proportioned and up-to-date summary of the clinical, parasitological and pathological aspects of malaria and of its treatment and medicinal prophylaxis. It is especially noticeable for the detailed account given of the latter two subjects and for the very full information regarding the new synthetic antimalarial compounds, which is more complete than that to be obtained in any other work of the kind known to the reviewer. Following a brief introduction some twelve pages are given to an account of the clinical picture of malaria, dealing with the incubation period and latency, prodromal symptoms, features of the acute attack as seen in the different forms of parasite and subsequent course of the disease. Unusual types (pernicious and other), the characters of the disease in children and common after-effects occupy a further twelve pages, which with a discussion on diagnosis and prognosis concludes this portion of the book.

In the section on treatment (41 pages) an account is given of quinine, atebrin and plasmoquine as used in treatment and medicinal prophylaxis. Very full details are given regarding the methods of administration of the different drugs, their possible toxic effects, their effectiveness against the attack and liability to subsequent relapses as well as suitability for continued use in the case of medicinal prophylaxis. Quinine (except in rare cases of idiosyncrasy) is outstandingly non-toxic and (specially important from the point of view of medicinal prophylaxis) there is little tendency to accumulate in the body. Various methods of administration and forms of treatment are discussed and a reference made to the use of some other cinchona alkaloids and derivatives. Quinidine and hydroquinine (dextro-rotatory compounds) are almost, if not quite, as effective as quinine (the latter possibly more so) and are stated by certain authorities not to cause undesirable effects in cases of idiosyncrasy to quinine itself. As is now almost universally recognised, the oral method of administration is that which should be adopted in all cases where there is no special indication to the contrary. This applies both to quinine and atebrin, though the objection to intramuscular use which amounts almost to malpraxis in the former case is much less cogent with atebrin since the local effect on the tissues has been shown to be much less marked and the drug rapidly absorbed. For treatment of the attack with quinine, a dose of 15 grams daily is effective and should be continued up to the fifth day after decline of the fever. Severe cases of malignant tertian

may require larger daily amounts (up to 30–40 grams) but nothing is gained by exceeding such dosage. Attention is rightly directed to the fact that with effective doses the temperature should return to normal not later than the sixth day and remain so even should treatment be temporarily stopped. If the temperature does not fall in such a period and remain normal, either the drug is not being taken or absorbed or the condition is not malaria or some complication is present. Atebrin is given in amounts of 0·3 grams (0·1 gram at a dose) daily for seven days by which time the temperature should be normal. Plasmoquine owing to its small effect on malignant tertian is now practically not used alone in treatment. Various special forms of treatment designed not only to control the attack but also to reduce liability to relapse are very fully discussed, such as Sinton's alkali quinine method and various combination treatments. Small amounts of plasmoquine with quinine appear to increase the effectiveness of treatment in this respect, but plasmoquine cannot be given simultaneously with atebrin without some danger of undesirable effects (gastro-intestinal disturbance). Some authors, however, follow atebrin treatment with a course of plasmoquine.

For medicinal prophylaxis the authors (as also the Malaria Commission of the League of Nations in their last report) prefer a daily dose of 5 grains quinine to larger doses bi-weekly. With atebrin 0·1 gram for four days in the week has been used, as also other modes of dosage.

The book includes a section on blackwater fever and there is a short section dealing with the technique and chief features of induced malaria, now extensively used in treatment of general paralysis and certain other nervous conditions. Tests are given for quinine and atebrin, also blood and haemoglobin, in the urine, with tests for urobilin. Henri's reaction is briefly described, but its essentially qualitative character and the necessity in carrying it out of strictly controlled technique (much as with the Wassermann reaction) is emphasized. Though theoretically of great interest, this test in practice would appear to offer few advantages over more direct methods such as prolonged search for parasites. There is a brief account of the pathological changes described in malaria, and a fairly full description of the haematological appearances, with useful directions for the preparation and staining of blood films and identification of parasites. In the final section a summarized account is given of the development of the parasite in the mosquito as also a very brief account of the mosquito and methods of prevention. Out of deference to English usage, *P. falciparum* is used in place of *P. immaculatum*, often used by German authors, and malignant tertian for malaria tropica.

The book should not only serve the purpose for which according to the preface of the German edition it was first intended, *viz.*, as a convenient short account of the disease for medical men and post-graduate students of tropical medicine, but it should also form a very useful book of reference, especially on treatment, to every malariologist. Whatever criticism on points of detail there may be, the fact remains that this is the most informed and complete account of the disease yet published and the authors, as well as the publishers of the present English edition, are to be congratulated in the way they have helped to fill a long-felt want, *viz.*, a small, handy general text-book on malaria. *S. R. Christophers.*

MacKenna (Robert W.) [the late] [M.A., M.D., Ch.B. (Edin.), etc.]. **Diseases of the Skin. A Manual for Students and Practitioners.** Fourth Edition revised and enlarged by Robert M. B. MacKenna, M.A., M.D. (Camb.), M.R.C.P. (Lond.), etc.—pp. xiv + 557. With 168 figs. & 46 coloured plates. 1937. London: Baillière, Tindall & Cox, 7 & 8 Henrietta Street, Covent Garden, W.C.2. [20*s*.]

Since the first edition was reviewed in this journal in 1923 Dr. Robert W. McKenna has passed away. The last two editions have therefore been revised and enlarged by his son, who is ably maintaining the reputation of dermatology in Liverpool. It is now five years since the third edition was published and the very great advances that have been made in this specialty since that date have necessitated very careful revision, particularly in those conditions where the importance of general metabolism, systemic disease, etc., is being increasingly recognized.

It is astonishing that a book of this size and one containing so many excellent illustrations and plates (again increased in numbers) can be produced at this price. The paper, printing and general presentation of the subject matter are alike worthy of high commendation. Let it be said at once that this is an outstanding volume from the point of view of the student and general practitioner in this country. Of course there will always be minor disagreements as to the inclusions and omissions when discussing the subject matter, but dermatology is to-day so vast a subject that no book of this size could do full justice to each disease. The following criticisms are therefore intended to be constructive and particularly so from the point of view of this journal.

The author apparently does not distinguish between senile and seborrhoeic warts and does not mention the fact that the former occur in biotripsis, *i.e.*, on "sailors' skin." The importance of these growths as precanceroses therefore does not receive mention and the whole question of the sun's influence in this respect is neglected. Many tropical dermatoses are briefly described in comparatively small paragraphs printed in small type, but leprosy is dealt with rather more fully than one would expect in a text-book of this kind. On the other hand the section on ringworm of the feet is much shorter and omits all mention of the terms "athlete's foot," "Hong Kong foot" etc. This article might with advantage be extended as the incidence of this disease is now very high, even in this country.

Syphilis is dealt with more efficiently than usual. Certain important but relatively unknown affections receive notice, such as the eruption due to *Brucella abortus*. Yet acarine mange caught from dogs is so little stressed that it is doubtful whether the reader will realize that this disease is by no means rare in human beings. The trade dermatitis section might also be enlarged. Thus we could trace no mention of cement or oil, apart from oil cancer. The question is of such vast importance to-day that some aspects of the legal problems involved could receive reference with advantage. For instance, but few practitioners realize that the first step involves a certificate from the Factory Surgeon of the area in which the man works and no other practitioner can usurp this prerogative.

Sydney Thomson.

IMMS (A. D.) [M.A., D.Sc., F.R.S., Reader in Entomology of Cambridge]. **Recent Advances in Entomology.** Second Edition.—pp. x + 431. With 94 figs. 1937. London: J. & A. Churchill, Ltd., 104, Gloucester Place, Portman Square. [15*s*.]

The avoidance of disease-carrying insects and their effective destruction or control by the most economical means demands an intimate knowledge of their life-history or, as it is usually called to-day, their ecology. Important aspects of ecology with which the medical entomologist is constantly faced concern the effects of climate, of temperature, moisture and drought, or the effects of nutrition, upon the prevalence of insects as determined by their rates of multiplication and power of survival. Much can be learned from an empirical study in the laboratory of the effects of the various ecological factors upon individual insects or populations of insects; particularly if such a study is checked and compared at every stage by observations in the field. That is the technique which at the present time is leading to a far better understanding of many groups of insects, notably the tsetse-flies and the plague-carrying fleas.

But when the analysis is pressed further, these ecological factors can exert their effects on the insect populations only by their influence upon the physiology of individual insects. So that for the proper understanding of ecology we need a thorough knowledge of insect physiology. Indeed, were the physiology of a given species sufficiently well known, many of its ecological responses to the environment could be predicted. And as ecology is based on physiology, so of course is physiology based on morphology.

These inter-relations between medicine and agriculture on the one hand and academic entomology on the other are well illustrated in Imms' "*Recent Advances in Entomology*," the second edition of which has just been published. This edition is larger than its predecessor by 56 pages; but it deals with the same range of subjects: morphology, metamorphosis, palaeontology, sense organs and behaviour, coloration, many aspects of ecology and their practical application, parasitism and biological control. On the applied side, most of the examples are from agriculture. There is an account of the biological races of mosquitoes, which is perhaps not better than can be readily found elsewhere; but it is of undoubted value to the medical entomologist to see this problem related to the question of biological races in general.

V. B. Wigglesworth.

It is with deep regret that we record the death on January 25th of Sir Thomas STANTON, K.C.M.G., Chief Medical Adviser to the Secretary of State for the Colonies and Chairman of the Honorary Managing Committee of the Bureau from 1926 to the date of his death.

We also record with regret the death on January 16th of Major E. E. AUSTEN, D.S.O., a Sectional Editor of this *Bulletin*.

Printed under the authority of HIS MAJESTY'S STATIONERY OFFICE
By the South Essex Recorders, Limited, High Road, Ilford.
(2407) Wt. P1/181 1875 2/38 S.E.R. Ltd. Gp. 353.

THE HOSPITAL FOR TROPICAL DISEASES

is open to ALL sufferers from Diseases peculiar to the Tropics. H.M.'s Government Offices have entered into official arrangements for the treatment of Officials in the Private Wards. The Ministry of Pensions recommend Officers and others for special treatment; and certain large commercial firms, in consideration of their annual subscriptions, enjoy special terms for the benefit of their members.

ADMISSION

may be obtained to Private Rooms, two-bedded Rooms and larger Private Wards on moderate terms either through the Honorary Medical Staff, or, in suitable cases, through the Out-Patient Department. Seamen and all necessitous persons are treated free.

Laboratory investigations constitute a special feature of the Hospital régime; these facilities are available for medical practitioners.

EDUCATION.

In the General Wards is found the unrivalled variety of clinical material, drawn from all parts of the Tropical Zone, which is placed at the disposal of the students of the London School of Hygiene & Tropical Medicine, and others.

Special Courses in Tropical Nursing are held twice a year.

In 1897, Sir Patrick Manson began in London his work among the Seamen who are the special care of the Seamen's Hospital Society, and the Voluntary Corporation to-day maintains this Special Hospital.

Enquiries to the Resident Secretary, Hospital for Tropical Diseases, 25, Gordon Street, London, W.C.1.

LONDON SCHOOL OF HYGIENE AND TROPICAL MEDICINE

(UNIVERSITY OF LONDON)

Incorporating the Ross Institute

DIPLOMA IN TROPICAL MEDICINE AND HYGIENE (Eng.)

Dates of the Courses, 1937–38.

PART I (3 months)—January 3rd–March 25th, 1938; April 4th–June 24th, 1938.

PART II (2 months)—January 17th–March 18th, 1938; April 19th–June 17th, 1938.

FEES (inclusive): Part I £25; Part II £15.

DIPLOMA IN PUBLIC HEALTH (University of London)

Courses of Study (whole time, nine months) commencing 28th September—inclusive fee 54 guineas.

DIPLOMA IN BACTERIOLOGY (University of London)

Course of Study (whole-time, one academic year) commencing in October—inclusive fee, £47 15s.

COURSES IN PSYCHOLOGY AND PHYSIOLOGY APPLIED TO INDUSTRY.

Two courses are provided. One lasts an academic year. The other is an intensive course from 7th February to 18th February, 1938.

EPIDEMIOLOGY AND VITAL STATISTICS

Special three-monthly advanced Courses—inclusive fee 7 guineas.

For Prospectuses and Synopses of Lectures, etc., apply to the Secretary, London School of Hygiene and Tropical Medicine, Keppel Street (Gower Street), London, W.C.1. (Museum 3041.)

BUREAU NOTICES.

The Director will be glad to receive early copies of works or reprints on Tropical Diseases for notice in the *Tropical Diseases Bulletin* and for the Library. (Telephone: MUSEUM 3041.)

Publications of the Bureau of Hygiene and Tropical Diseases.

TROPICAL DISEASES BULLETIN

containing classified summaries of current papers and reports from the medical and scientific publications of the world on diseases of the tropics and warm countries.

(ISSUED MONTHLY.)

Subscription rate (in advance): 21 shillings per annum post free. The subscription runs from January to December. Single numbers 2s. 6d. each.

SUPPLEMENTS TO THE TROPICAL DISEASES BULLETIN

summarizing the Annual Medical and Sanitary Reports from British Colonies, Protectorates and Dependencies.

(ISSUED ANNUALLY.)

Back Supplements can be supplied as follows :—

Dec. 1931	SUPPLEMENT	dealing	with	the	Annual	Reports for 1929.	Price 2s. 6d. net.
Oct. 1932	"	"	"	"	"	1930.	Price 2s. 6d. net.
Oct. 1933	"	"	"	"	"	1931.	Price 5s. 0d. net.
Dec. 1934	"	"	"	"	"	1932.	Price 5s. 0d. net.
Nov. 1935	"	"	"	"	"	1933.	Price 7s. 6d. net.
Oct. 1936	"	"	"	"	"	1934.	Price 7s. 6d. net.
Nov. 1937	"	"	"	"	"	1935.	Price 7s. 6d. net.

The Subscription rate for the TROPICAL DISEASES BULLETIN with SUPPLEMENT is 25 shillings per annum.

BULLETIN OF HYGIENE

containing classified summaries and reviews of publications on all branches of public health and preventive medicine.

(ISSUED MONTHLY.)

Subscription rate (in advance): 21 shillings per annum post free. The subscription runs from January to December. Single numbers 2s. 6d. each.

ORDERS and SUBSCRIPTIONS may be sent direct to the

BUREAU OF HYGIENE AND TROPICAL DISEASES,
Keppel Street,
Gower Street,
London, W.C.1

or through any bookseller.

Cheques and Postal Orders should be made payable to the "Bureau of Hygiene and Tropical Diseases," and crossed "Westminster Bank Ltd."

The Bureau has from time to time obtained, by purchase or otherwise, copies of journals or monographs for its correspondents. In view of the difficulties which the ordinary agent meets in carrying out commissions of this kind, the Bureau is prepared to do its best to obtain such publications or photogram copies of particular papers, for any of its subscribers. Out-of-pocket expenses will be met by the applicant, who should state the amount he would be prepared to pay for the journals or monographs or photogram copies required, and, when possible, send a money order with his application or a reference to an agent who will meet the cost incurred.